REV.	ECN NO OR DESCRIPTION	REVISED	DATE
A	PDR NO:T221114-3A	Qing	2023.10.10

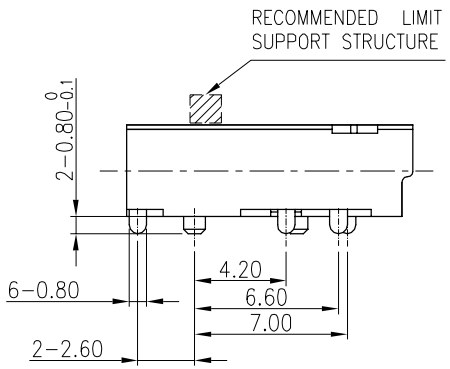

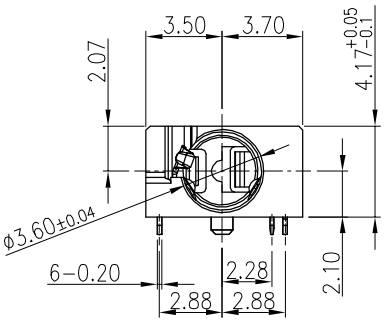

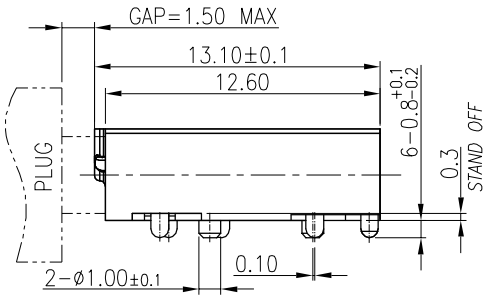

SPECIFICATIONS:

1. ELECTRICAL CHARACTERISTICS:
   1-1. RATING: 12V 1A
   1-2. CONTACT RESISTANCE: 50mΩ MAX.(INITIAL)
   1-3. DIELECTRIC WITHSTANDING VOLTAGE: 500V AC FOR ONE MINUTE.
   1-4. INSULATION RESISTANCE: 100MΩ MIN. MEASURED BY 500V DC
2. MECHANICAL CHARACTERISTICS:
   2-1. INSERTION FORCE : 0.3~3.0 KGF
   2-2. WITHDRAWAL FORCE : 0.3~3.0 KGF
3. LIFE TEST: 5,000 CYCLES .
4. PACKAGING : TAPE & REEL.
5. AFTER HUMIDITY TEST, INSULATION RESISTANCE: 50MΩ MIN.
6. TO CONFORM TO SINGATRON HAZARDOUS SUBSTANCE FREE SPEC.
7. HALOGEN FREE PRODUCT IDENTIFICATION MARK ON PRODUCT:
8. HALOGEN FREE PRODUCT IDENTIFICATION LOGO ON PACKAGING:
9. FOR REFLOW SOLDERING LEAD-FREE PROCESS.
10. PRINTED DATE CODE"YMD=" ON TOP OF CONNECTOR.

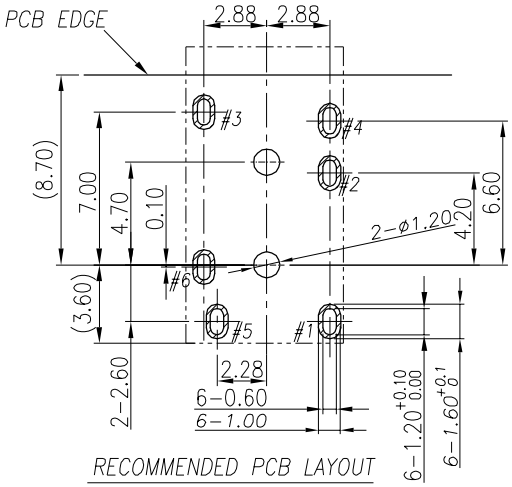

RECOMMENDED PCB LAYOUT

TOP VIEW ; TOL.±0.05

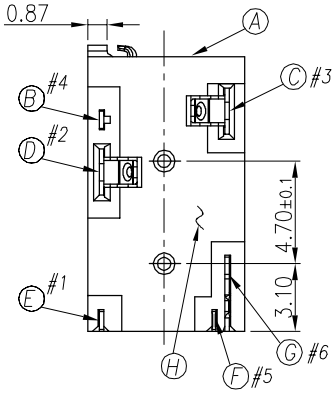

MATCH MECHANISM ID NEEDS TO AVOID INTERFERENCE WITH TERMINAL WHEN PLUG IN.

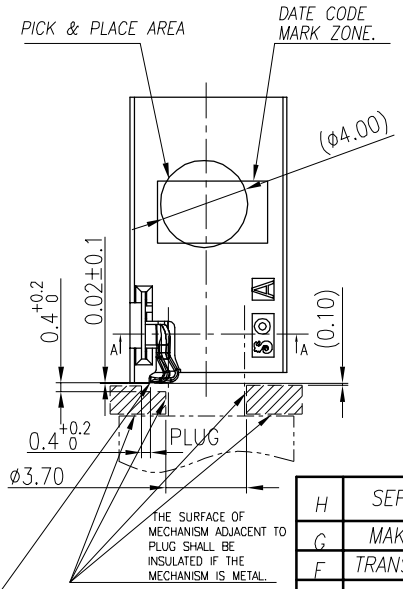

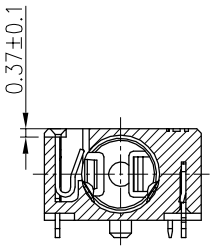

A-A SECTION

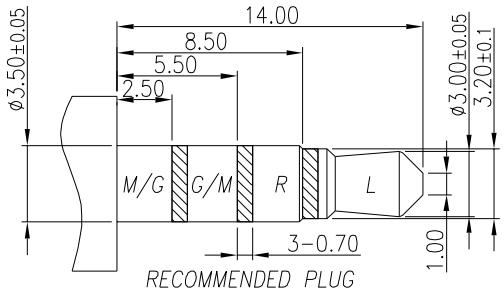

RECOMMENDED PLUG

ø3.5 4-POLE STANDARD PLUG

SCHEMATIC

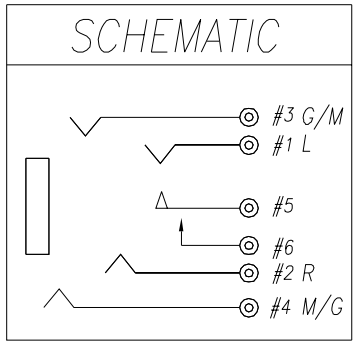

NO	DESCRIPTION	QTY	MATERIAL	PLATING & COLOR
H	SEPARATOR	1	HIGH TEMP.THERMOPLASTIC UL 94V-0	BLACK
G	MAKE TERMINAL	1	PHOSPHOR BRONZE 0.2t	1-3μin GOLD PLATING ON CONTACT AREA; 1-3μin GOLD PLATING ON SOLDER AREA; AND 50μin Min. NICKEL UNDER PLATING.
F	TRANSFER TERMINAL	1	PHOSPHOR BRONZE 0.2t	
E	TIP SPRING	1	STAINLESS STEEL 0.2t	3μin GOLD PLATING ON CONTACT AREA; 1-3μin GOLD PLATING ON SOLDER AREA; AND 50μin Min. NICKEL UNDER PLATING.
D	RING A	1	PHOSPHOR BRONZE 0.2t	
C	RING B	1	PHOSPHOR BRONZE 0.2t	
B	EARTH	1	PHOSPHOR BRONZE 0.2t	
A	BODY	1	HIGH TEMP.THERMOPLASTIC UL 94V-0	BLACK

UNLESS OTHERWISE SPECIFED TOLERANCES

Singatron Enterprise Co., Ltd.
信音企業股份有限公司

DECIMALS: X :±0.5, X.X :±0.3, X.XX :±0.2

ANGLES: X :±2°, X.X :±1°

TITLE	3.5ø AUDIO JACK R/A TYPE			
DWN	Qing	PART NO.2SJ3098-047111F		
CHKD	Bruce	SCALE 4:1	UNIT: mm	
APVD	Liao	SIZE: A3	SHEET:1 OF 1	REV: A

CUSTOMER COPY

文件編號:RD-06-043-A