REV.	ECN NO OR DESCRIPTION	REVISED	DATE
A	PDR NO: T150713-1A	Ming	2016.03.23

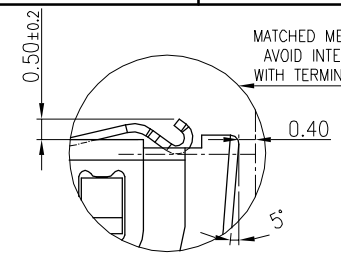

DETAIL:A
SCALE:2:1

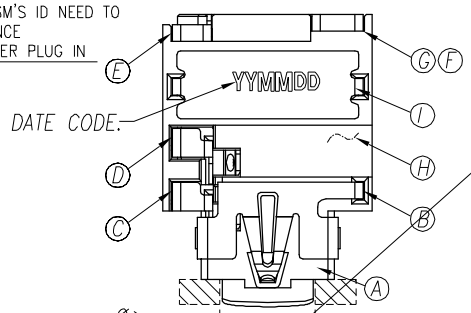

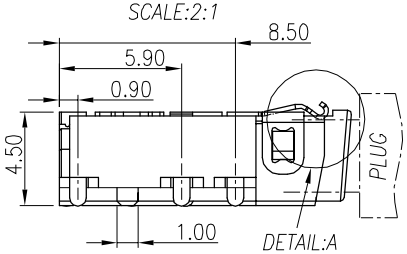

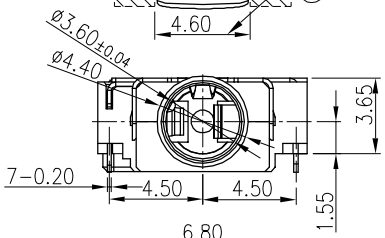

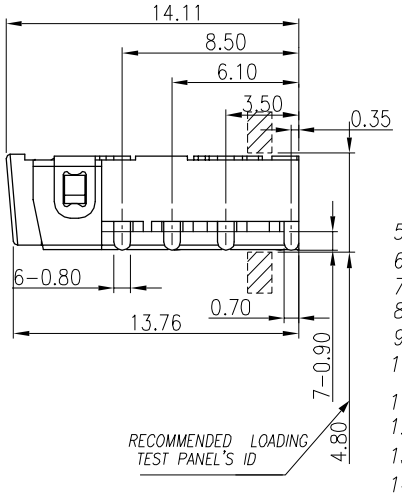

SPECIFICATIONS:

1. INSULATION RESISTANCE BETWEEN ANY ADJACENT OPEN CIRCUIT TERMINAL SHELL NOT BE LESS THAN 100M MEASURED BY 500 VDC.
2. CONTACT RESISTANCE: 50mΩ MAX(INITIAL).
3. INSULATION VOLTAGE WITHSTAND:500V AC FOR ONE MINUTE.
4. UNLESS OTHERWISE SPECIFIED. TEST IS TO BE MADE AT 5-35°C IN TEMPERATURE AND 45-85% IN HUMIDITY. BUT,IF ANY VAGUE DATA IS OCCURED ON TEST RESULT, ANOTHER TEST SHALL BE MADE AT 20°C±2°C IN TEMP., 60-70% IN HUMIDITY.
5. LIFE TEST: 5,000 CYCLES MIN.
6. INSERTION FORCE: 0.3 - 3Kg.
7. WITHDRAWAL FORCE: 0.2 - 3Kg.
8. AFTER LIFE TEST, CONTACT RESISTANCE: 100m Ω MAX.
9. AFTER HUMIDITY TEST, INSULATION RESISTANCE: 50M Ω MIN.
10. MARKING: MARK" " ON TOP OF CONNECTOR.
11. PACKING : TAPE & REEL.
12. TO CONFORM TO SINGATRON HAZARDOUS SUBSTANCE FREE SPEC.
13. HALOGEN FREE PRODUCT IDENTIFICATION MARK ON PRODUCT:
14. HALOGEN FREE PRODUCT IDENTIFICATION LOGO ON PACKAGING:
15. HOUSING'S STRENGTH IS <3.0Kg

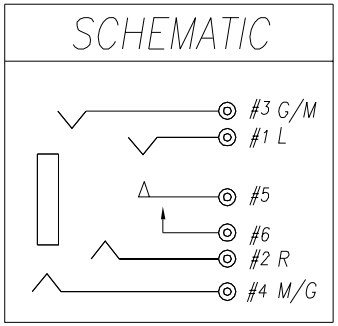

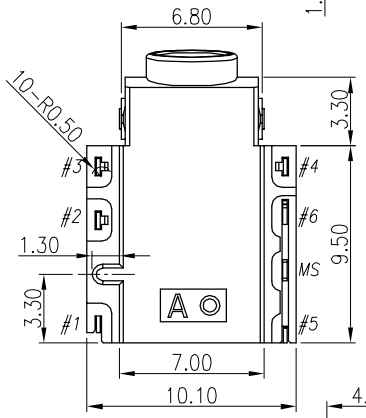

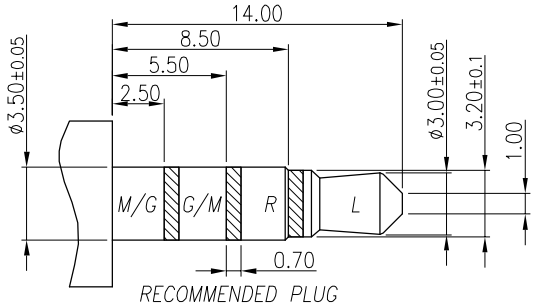

RECOMMENDED PLUG
ø3.5 4-POLE STANDARD PLUG

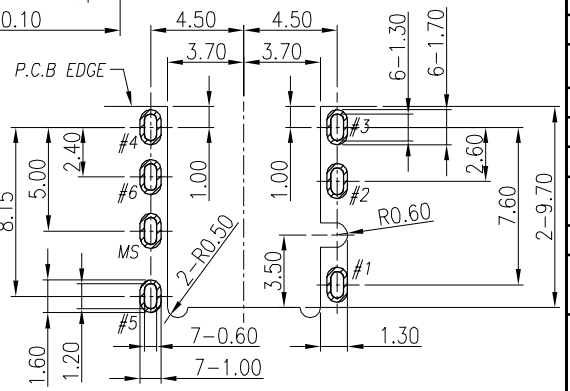

RECOMMENDED PCB LAYOUT
TOP VIEW ; TOL.±0.05

NO	DESCRIPTION	QTY	MATERIAL	PLATING & COLOR
I	SHELL	1	SUS304-1/2H 0.2t	Ni 60u"Min.
H	SEPARATOR	1	LCP E130i UL94V-0	BLACK
G	TRANSFER TERMINAL	1	C5210-EH 0.2t	GOLD FLASH ON CONTACT AREA; GOLD FLASH ON SOLDER AREA; ALL OVER 50u" Ni.
F	MAKE TERMINAL	1	C5210-EH 0.2t	GOLD FLASH ON CONTACT AREA; Matte Sn80u" ON SOLDER AREA; ALL OVER 50u" Ni.
E	TIP SPRING	1	C5210-EH 0.2t	
D	RING A	1	C5210-EH 0.2t	
C	RING B	1	C5210-EH 0.2t	
B	EARTH	1	C5210-EH 0.2t	
A	BODY	1	PA4T+30%GF,(TX1) UL94V-0	BLACK

UNLESS OTHERWISE SPECIFED TOLERANCES

DECIMALS: X :±0.5, X.X :±0.3, X.XX :±0.2
ANGLES: X :±2°, X.X :±1°

Singatron Enterprise Co., Ltd.
信音企業股份有限公司

TITLE	3.5ø PHONE JACK			
DWN	Ming	PART NO.2SJ3108-051111F		
CHKD	Bruce	SCALE 4:1	UNIT: mm	
APVD	Lussen	SIZE: A3	SHEET:1 OF 1	REV: A

CUSTOMER COPY

文件編號 RD-06-043-A