REV.	ECN NO OR DESCRIPTION	REVISED	DATE
A	PDR NO: T151020-2A	Ming	2016.07.18

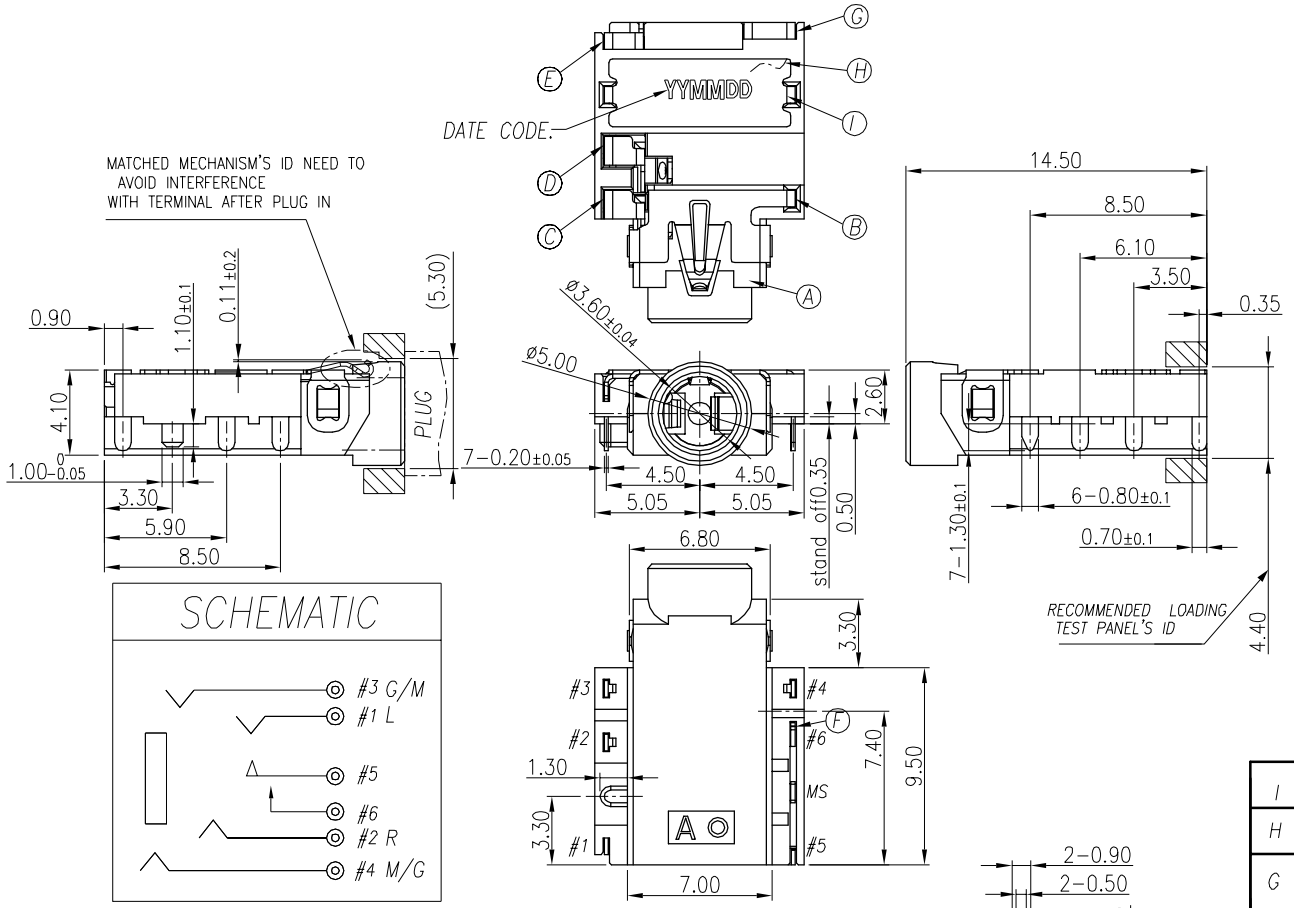

SPECIFICATIONS:

1. ELECTRICAL CHARACTERISTICS:
   - 1-1. RATING: 12V 1A
   - 1-2. CONTACT RESISTANCE: 50mΩ MAX.(INITIAL)
   - 1-3. DIELECTRIC WITHSTANDING VOLTAGE: 500V AC FOR ONE MINUTE.
   - 1-4. INSULATION RESISTANCE: 100MΩ MIN. MEASURED BY 500 VDC.
2. MECHANICAL CHARACTERISTICS:
   - 2-1. INSERTION FORCE: 0.5~2.2Kgf AFTER THE FIFTH TIME; 0.4~2.2Kgf AFTER LIFE TEST;
   - 2-2. WITHDRAWAL FORCE: 0.5~2.0Kgf AFTER THE FIFTH TIME; 0.4~2.0Kgf AFTER LIFE TEST;
3. LIFE TEST: 5,000 CYCLES MIN. AFTER LIFE TEST, CONTACT RESISTANCE: 100mΩ MAX.
4. PACKAGING : TAPE & REEL.
5. AFTER HUMIDITY TEST, INSULATION RESISTANCE: 50MΩ MIN.
6. OTHER GENERAL SPEC TO REFER "AUDIO JACK FOR ASUS SPEC"
7. TO CONFORM TO SINGATRON HAZARDOUS SUBSTANCE FREE SPEC.
8. HALOGEN FREE PRODUCT IDENTIFICATION MARK ON PRODUCT:
9. HALOGEN FREE PRODUCT IDENTIFICATION LOGO ON PACKAGING:
10. FOR LEAD-FREE PROCESS.
11. PRINTED DATE CODE"YYMMDD- " ON TOP OF CONNECTOR.
12. OVERLOADING FORCE < 4KGF

NO	DESCRIPTION	QTY	MATERIAL	PLATING & COLOR
I	SHELL	1	SUS304-1/2H 0.2t	Ni 60u"Min.
H	SEPARATOR	1	LCP E130i UL 94V-0	BLACK
G	TRANSFER TERMINAL	1	C5210-EH 0.2t	GOLD FLASH ON CONTACT AREA; GOLD FLASH ON SOLDER AREA; ALL OVER 50u" Ni.
F	MAKE TERMINAL	1	C5210-EH 0.2t	GOLD FLASH ON CONTACT AREA; Matte Sn80u" ON SOLDER AREA; ALL OVER 50u" Ni.
E	TIP SPRING	1	C5210-EH 0.2t	
D	RING A	1	C5210-EH 0.2t	
C	RING B	1	C5210-EH 0.2t	
B	EARTH	1	C5210-EH 0.2t	
A	BODY	1	PA4T+30%GF TX1 UL 94V-0	BLACK

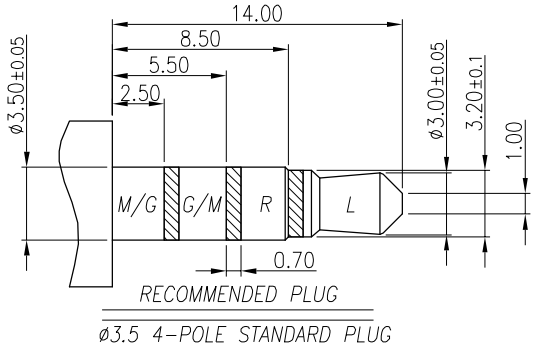

RECOMMENDED PLUG

ø3.5 4-POLE STANDARD PLUG

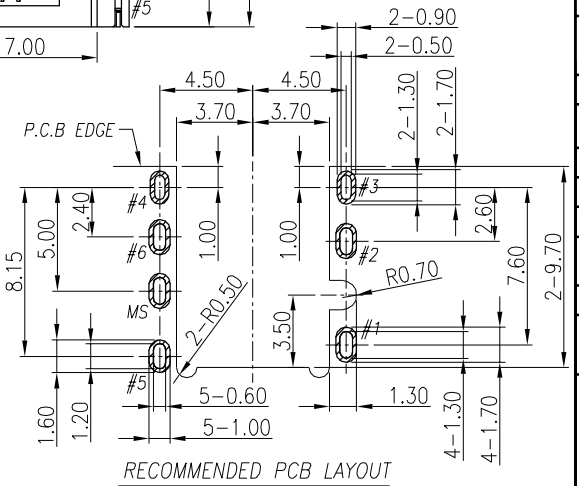

RECOMMENDED PCB LAYOUT

TOP VIEW ; TOL.±0.05

UNLESS OTHERWISE SPECIFED TOLERANCES

DECIMALS: X :±0.5, X.X :±0.3, X.XX :±0.2

ANGLES: X :±2°, X.X :±1°

Singatron Enterprise Co., Ltd.
信音企業股份有限公司

TITLE	3.5ø PHONE JACK		
DWN	Ming	PART NO.2SJ3108-062111F	
CHKD	Bruce	SCALE 4:1	UNIT: mm
APVD	Lussen	SIZE: A3	SHEET:1 OF 1 REV: A

CUSTOMER COPY

文件編號 RD-06-043-A