REV.	ECN NO OR DESCRIPTION	REVISED	DATE
A	PDR NO.: T150706-1A	Peng	2016.03.01

SPECIFICATIONS:

1. ELECTRICAL CHARACTERISTICS:
   1-1. RATING: 12V 1A
   1-2. CONTACT RESISTANCE: 50mΩ MAX.(INITIAL)
   1-3. DIELECTRIC WITHSTANDING VOLTAGE: 500V AC FOR ONE MINUTE.
   1-4. INSULATION RESISTANCE: 100MΩ MIN. MEASURED BY 500V DC
2. MECHANICAL CHARACTERISTICS:
   2-1. INSERTION FORCE : 0.3~3.0 KGF
   2-2. WITHDRAWAL FORCE : 0.3~3.0 KGF
   3. LIFE TEST: 5,000 CYCLES
4. AFTER LIFE TEST, CONTACT RESISTANCE: 60mΩ MAX.
5. AFTER HUMIDITY TEST, INSULATION RESISTANCE: 50MΩ MIN.
6. TO CONFORM TO SINGATRON HAZARDOUS SUBSTANCE FREE SPEC.
7. HALOGEN FREE PRODUCT IDENTIFICATION MARK ON PRODUCT:
8. HALOGEN FREE PRODUCT IDENTIFICATION LOGO ON PACKAGING:
9. AFTER OVERLOAD TEST,THE HOUSING'S STRENGTH IS <4.0Kg

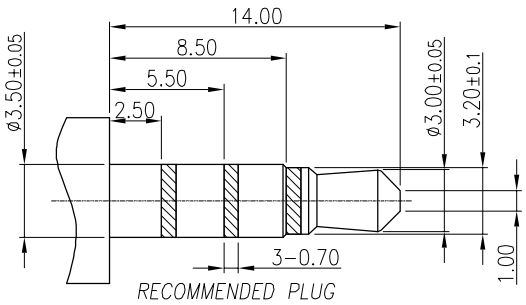

RECOMMENDED PLUG

ø3.5 4-POLE STANDARD PLUG

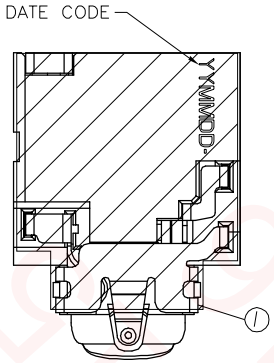

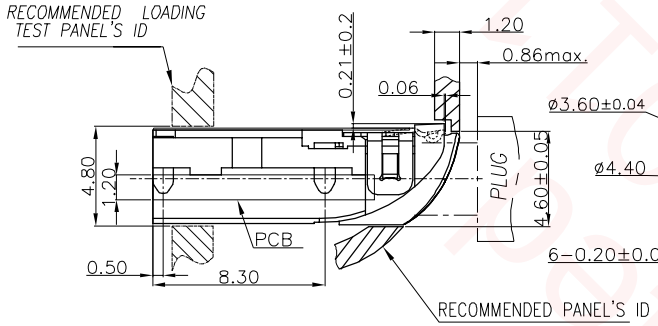

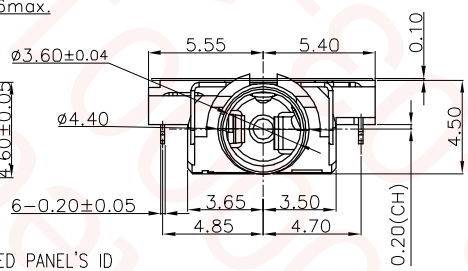

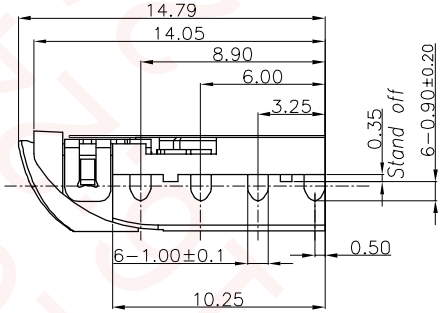

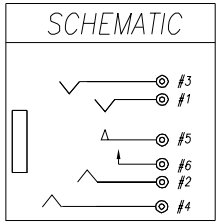

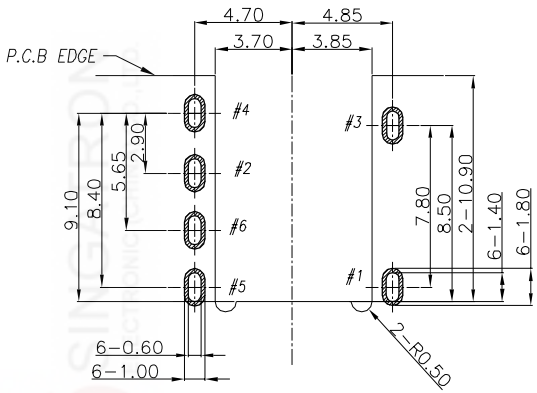

RECOMMENDED PCB LAYOUT(TOP VIEW),T=1.20mm

(TOLERANCE: ±0.05)

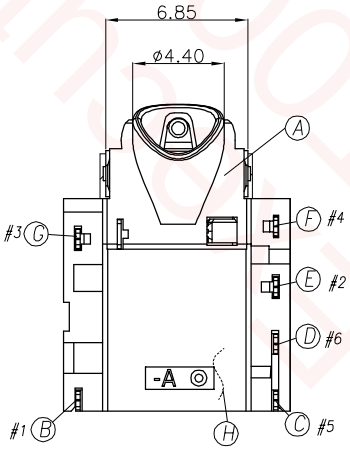

NO	DESCRIPTION	QTY	MATERIAL	PLATING & COLOR
I	MYLAR	1	KAPTON+SILICON GLUE	YELLOW
H	SEPARATOR	1	LCP E130i (全新料)	BLACK
G	RING-B	1	CH5210-EH 0.2t	GOLD FLASH ON CONTACT AREA; Matte Sn80u" ON SOLDER AREA; ALL OVER NI 50u" PLATING.
F	EARTH	1	CH5210-EH 0.2t	GOLD FLASH ON CONTACT AREA; GOLD FLASH ON SOLDER TAIL AREA; ALL OVER NI 50u" PLATING.
E	RING-A	1	CH5210-EH 0.2t	
D	MAKE	1	CH5210-EH 0.2t	
C	TRANSFER	1	CH5210-EH 0.2t	
B	TIP	1	CH5210-EH 0.2t	
A	BODY	1	PA4T+30%GF UL94V-0(無鹵)	BLACK

UNLESS OTHERWISE SPECIFED TOLERANCES

DECIMALS: X :±0.5, X.X :±0.3, X.XX :±0.2

ANGLES: X :±2°, X.X :±1°

Singatron Enterprise Co., Ltd.
信音企業股份有限公司

TITLE	ø3.50 AUDIO JACK			
DWN	Peng	PART NO. 2SJ3132-005111F		
CHKD	Bruce	SCALE:4:1	UNIT: mm	
APVD	Lussen	SIZE: A3	SHEET:1 OF 1	REV: A

CUSTOMER COPY

文件編號: RD-06-043-A