REV.	ECN NO OR DESCRIPTION	REVISED	DATE
A	PDR NO: S150304-3A	Bruce	2016.05.30

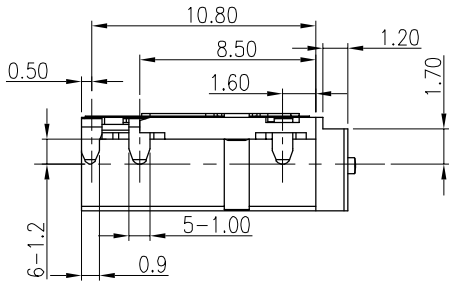

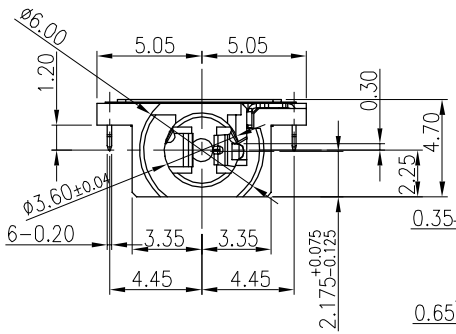

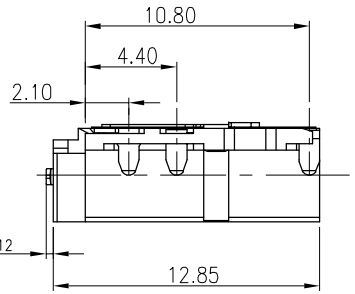

MATCH MECHANISM ID NEEDS TO AVOID INTERFERENCE WITH TERMINAL AFTER PLUG IN.

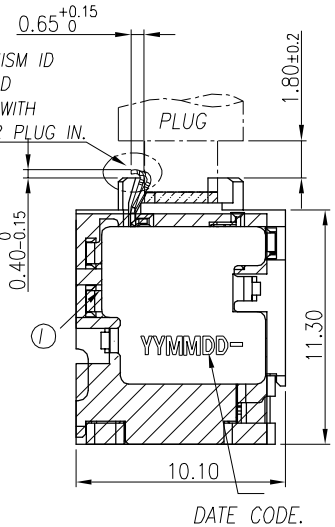

SPECIFICATIONS:

1. INSULATION RESISTANCE BETWEEN ANY ADJACENT OPEN CIRCUIT TERMINAL SHELL NOT BE LESS THAN 100MΩ MEASURED BY 500V DC .
2. CONTACT RESISTANCE: 50mΩ MAX(INITIAL).
3. INSULATION VOLTAGE WITHSTAND:500V AC FOR ONE MINUTE.
4. LIFE TEST: 5,000 CYCLES MIN.
5. INSERTION FORCE: 0.4-3.0 Kgf ,
6. WITHDRAWAL FORCE: 0.3-3.0 Kgf,
7. AFTER LIFE TEST, CONTACT RESISTANCE: 100mΩ MAX.
8. AFTER HUMIDITY TEST, INSULATION RESISTANCE: 50MΩ MIN.
9. MARKING: MARK" " ON TOP OF CONNECTOR.
10. PACKING : TAPE & REEL.
11. TO CONFORM TO SINGATRON HAZARDOUS SUBSTANCE FREE SPEC.
12. HALOGEN FREE PRODUCT IDENTIFICATION MARK ON PRODUCT:
13. HALOGEN FREE PRODUCT IDENTIFICATION LOGO ON PACKAGING.

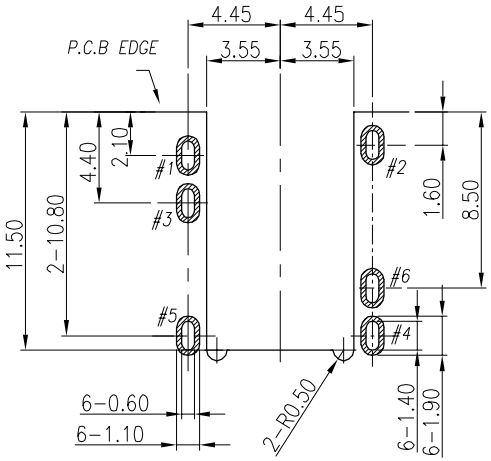

RECOMMENDED PCB LAYOUT

TOP VIEW ; TOL.±0.05

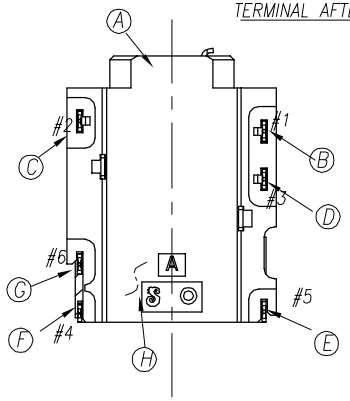

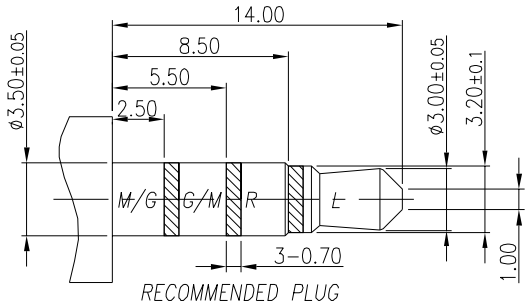

RECOMMENDED PLUG

ø3.5 4-POLES TOLERANCE:±0.05

SCHEMATIC

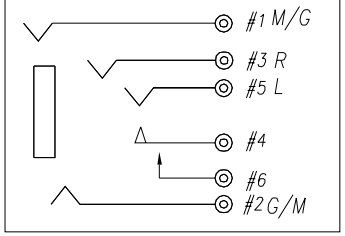

NO	DESCRIPTION	QTY	MATERIAL	PLATING & COLOR
J	MYLAR	1	0.08 t	YELLOW
I	SHELL	1	SUS 0.12t	
H	SEPARATOR	1	HIGH TEMP.THERMOPLASTIC UL 94V-0	BLACK
G	MAKE TERMINAL	1	PHOSPHOR BRONZE 0.2t	GOLD FLASH ON CONTACT AREA; GOLD FLASH ON SOLDER AREA; ALL OVER 50u" Ni.
F	TRANSFER TERMINAL	1	PHOSPHOR BRONZE 0.2t	
E	TIP SPRING	1	PHOSPHOR BRONZE 0.2t	
D	RING A	1	PHOSPHOR BRONZE 0.2t	
C	RING B	1	PHOSPHOR BRONZE 0.2t	
B	EARTH	1	PHOSPHOR BRONZE 0.2t	
A	BODY	1	HIGH TEMP.THERMOPLASTIC UL 94V-0	BLACK

UNLESS OTHERWISE SPECIFED TOLERANCES

DECIMALS: X :±0.5, X.X :±0.3, X.XX :±0.2

ANGLES: X :±2°, X.X :±1°

Singatron Enterprise Co., Ltd.
信音企業股份有限公司

TITLE	3.5ø PHONE JACK			
DWN	Bruce	PART NO. 2SJ3156-000111F		
CHKD	Sky	SCALE 4:1	UNIT: mm	
APVD	Lussen	SIZE: A3	SHEET:1 OF 1	REV: A

CUSTOMER COPY

RD-06-043-A