REV.	ECN NO OR DESCRIPTION	REVISED	DATE
A	PDR NO: T200324-1A	RAINY	2021.05.31

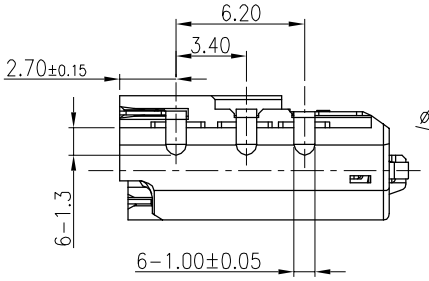

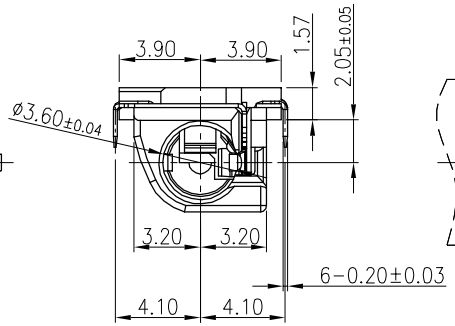

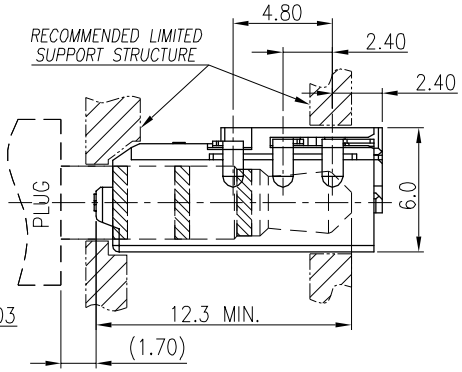

SPECIFICATIONS:

1. ELECTRICAL CHARACTERISTICS:
   1-1. RATING: 12V 1A
   1-2. CONTACT RESISTANCE: 50mΩ MAX.(INITIAL)
   1-3. DIELECTRIC WITHSTANDING VOLTAGE: 500V AC FOR ONE MINUTE.
   1-4. INSULATION RESISTANCE: 100MΩ MIN. MEASURED BY 500 VDC
2. MECHANICAL CHARACTERISTICS:
   2-1. INSERTION FORCE: 5~20N
   4~20N (AFTER LIFE TEST)
   2-2. WITHDRAWAL FORCE: 5~20N
   4~20N (AFTER LIFE TEST)
3. LIFE TEST: 5,000 CYCLES MIN.
   AFTER LIFE TEST, CONTACT RESISTANCE: 100mΩ MAX.
4. AFTER HUMIDITY TEST, INSULATION RESISTANCE: 50MΩ MIN.
5. TO CONFORM TO SINGATRON HAZARDOUS SUBSTANCE FREE SPEC.
6. HALOGEN PRODUCT IDENTIFICATION MARK ON JACK:
7. HALOGEN PRODUCT IDENTIFICATION LABEL ON PACKAGING:
8. FOR REFLOW SOLDERING LEAD-FREE PROCESS.
9. PRINTED DATE CODE" YMD " ON TOP OF JACK.

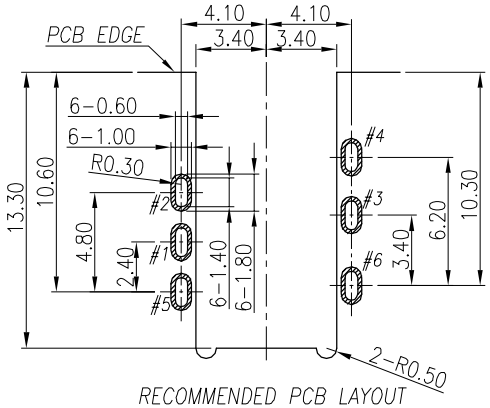

RECOMMENDED PCB LAYOUT

TOP VIEW ; TOL.±0.05

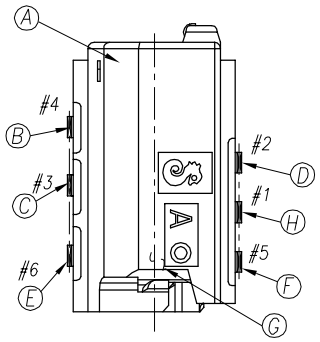

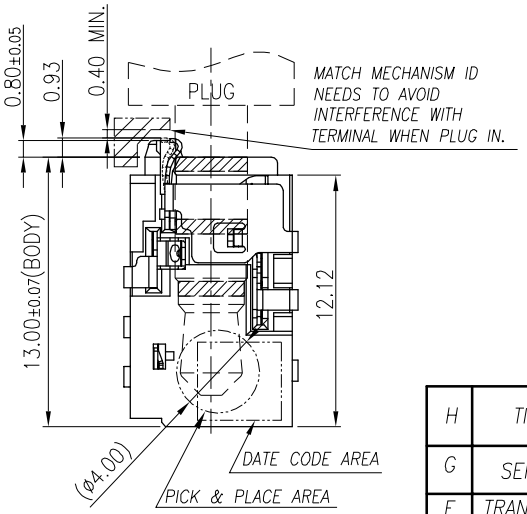

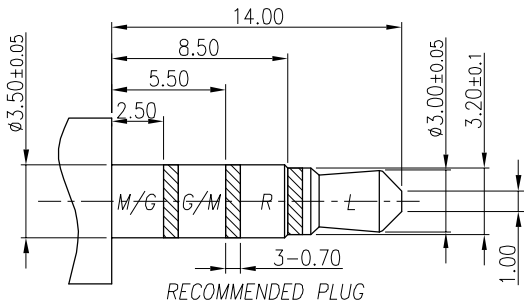

RECOMMENDED PLUG

Ø3.5 4-POLE PLUG, TOL.±0.05

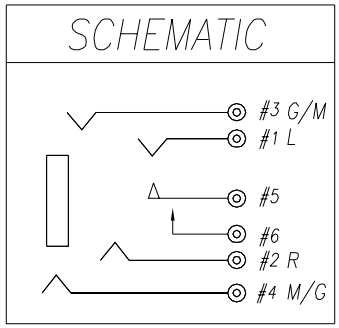

NO	DESCRIPTION	QTY	MATERIAL	PLATING & COLOR
H	TIP SPRING	1	STAINLESS STEEL, 0.2T	1~3μin GOLD PLATING ON CONTACT AREA, 1~3μin GOLD PLATING ON SOLDER TAIL AREA, AND 50μin MIN. NICKEL UNDER PLATING.
G	SEPARATOR	1	THERMOPLASTIC, UL 94V-0	BLACK
F	TRANSFER TERMINAL	1	PHOSPHOR BRONZE 0.2T	1~3μin GOLD PLATING ON CONTACT AREA, 1~3μin GOLD PLATING ON SOLDER TAIL AREA, AND 50μin MIN. NICKEL UNDER PLATING.
E	MAKE TERMINAL	1	PHOSPHOR BRONZE 0.2T	
D	RING A	1	PHOSPHOR BRONZE 0.2T	
C	RING B	1	PHOSPHOR BRONZE 0.2T	
B	EARTH	1	PHOSPHOR BRONZE 0.2T	
A	BODY	1	THERMOPLASTIC, UL 94V-0	BLACK

UNLESS OTHERWISE SPECIFED TOLERANCES

DECIMALS: X :±0.5, X.X :±0.3, X.XX :±0.2

ANGLES: X :±2°, X.X :±1°

Singatron Enterprise Co., Ltd.
信音企業股份有限公司

TITLE	Ø3.5 AUDIO JACK R/A TYPE		
DWN	RAINY	PART NO. 2SJ3176-007111F	
CHKD	BRUCE	SCALE 4:1	UNIT: mm
APVD	MAX	SIZE: A3	SHEET:1 OF 1 REV:A

CUSTOMER COPY

文件編號:RD-06-043-A