REV.	ECN NO OR DESCRIPTION	REVISED	DATE
A	FIRST EDITION RELEASED	Charlie Gui	04/20'07
B	ECN-C070107-3/3 B CHANGE D/C	Charlie Gui	05/22'07

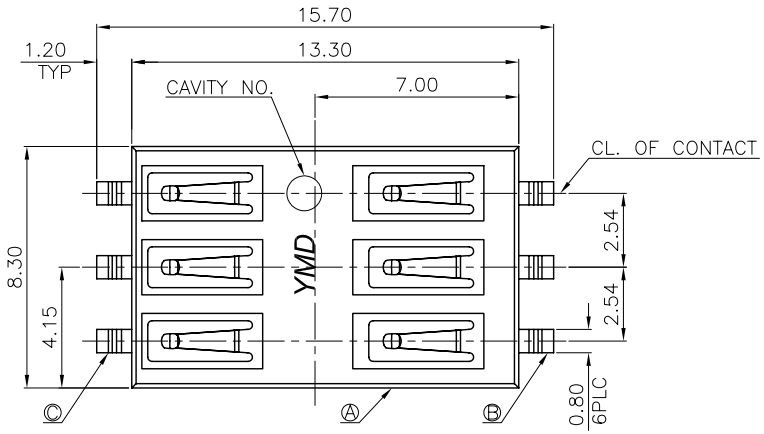

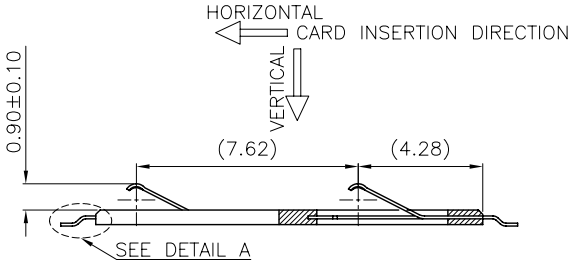

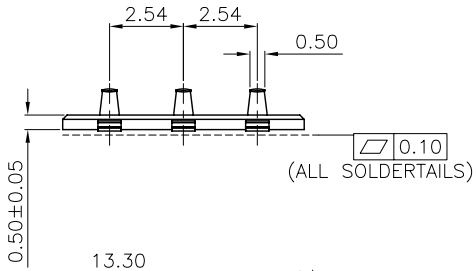

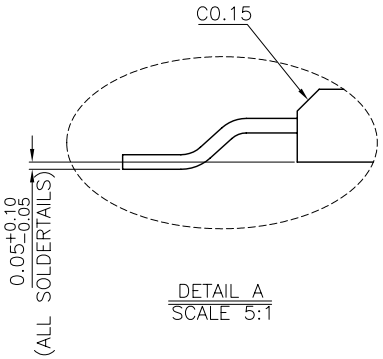

DETAIL A
SCALE 5:1

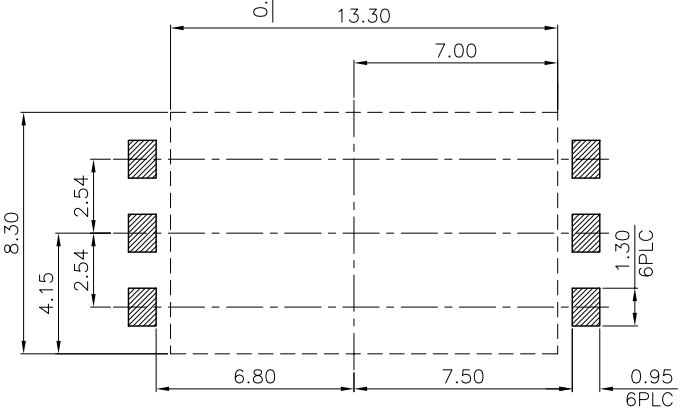

RECOMMENDED PC. BOARD LAYOUT
(TOL. ±0.05)(TOP VIEW)

NOTE:
1. MATERIAL:
   HOUSING:HIGH THERMAL PLASTIC.,W/30% GF.,UL94V-0,COLOR BLACK.
   CONTACT A&CONTACT B:COPPER ALLOY,T=0.10;
2. FINISH:
   CONTACT A&CONTACT B:
   30u" MIN GOLD PLATING ON CONTACT AREA;
   1u" MIN GOLD PLATING ON SOLDER TAILS;
   50u" MIN NICKEL UNDERPLATING OVERALL.
3. SPECIFICATION:SEE 2.54mm PITCH SIM CARD SMT TYPE PRODUCT SPEC.
4. SOLDER HEAT RESISTANCE: REFLOW SOLDERING 260° FOR 10SEC.
5. TO CONFORM TO THE "SE-01-001" & "ROHS DIRECTIVE".
6. GREEN PRODUCT IDENTIFICATION IN PACKING: G.P. PASS
7. FOR REFLOW SOLDERING LEED FREE PROCESS.
8. UNLESS OTHERWISE SPECIFED TOLERANCES ARE ±0.15mm.
9. P/N DESCRIPTION:
   2SM2000-023011
   - PACKAGE:TAPE AND RELL
   - HOUSING COLOR:BLACK
   - CONTACT FINISH:GOLD 30u" MIN ON CONTACT AREA
   - NOTCH:WITHOUT NOTCH
10. D/C DESCRIPTION: B
    Y M D
    - DAY
    - MONTH
    - YEAR

NO	DESCRIPTION	QTY	MATERIAL	PLATING&COLOR
C	CONTACT B	3	COPPER ALLOY,0.10T	SEE NOTES
B	CONTACT A	3	COPPER ALLOY,0.10T	SEE NOTES
A	HOUSING	1	HI-THERMAL PLASTIC,UL94V-0	COLOR BLACK

UNLESS OTHERWISE SPECIFED TOLERANCES

DECIMALS:
X :±0.5
X.X :±0.3
X.XX :±0.2

ANGLES:
X :±2°
X.X :±1°

Singatron Electronic(Chung-Shan) Co., Ltd.
信音電子(中山)有限公司

TITEL	2.54mm PITCH SIM CARD 6P 0.5H SMT TYPE		
DWN	Charlie Gui 05/22'07	PART NO. 2SM2000-023011	
CHKD	ZK CHEN 05/22'07	SCALE: N/A	UNIT: mm
APVD	SEAN LONG 05/22'07	SIZE: A3	SHEET: 10F1	REV: B

CUSTOMER COPY

文件編號:RD-06-035-2A