REV.	ECN NO OR DESCRIPTION	REVISED	DATE
A	PDR RELEASE	IVY-C	2012.02.23

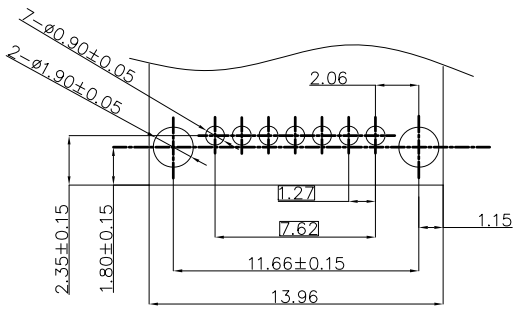

RECOMMEND PCB LAYOUT

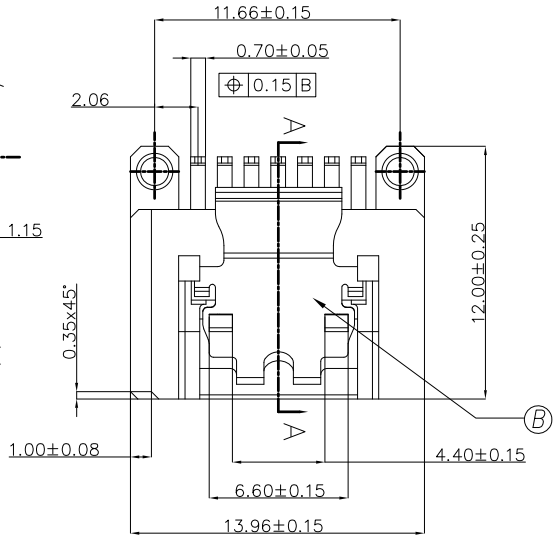

SPECIFICATIONS:

1. ELECTRICAL CHARACTERISTICS:
   1-1. CURRENT RATING: 1.5 AMP. MAX.
   1-2. CONTACT RESISTANCE: 30mΩ MAX.
   1-3. INSULATION RESISTANCE: 1000MΩ MIN. @ 500V AC.
   1-4. DIELECTRIC WITHSTANDING VOLTAGE: 500V AC FOR 1 MINUTE.
2. MECHANICAL CHARACTERISTICS:
   2-1. INSERTION FORCE: 45N MAX.
3. LIFE TEST: 500 CYCLES.
4. OTHER GENERAL SPEC. TO REFER "2ST1522 SERIES SPEC".
5. TO CONFORM TO THE SINGATRON HAZARDOUS SUBSTANCE FREE SPEC.
6. HALOGEN FREE PRODUCT IDENTIFICATION LABEL ON PACKAGING:
7. PACKAGE: SEE "2ST1522 SERIES" PACKAGE.
8. FOR REFLOW SOLDERING LEAD-FREE PROCESS.

PART NO.

2ST1522-000111F

- SUFFIX: HALOGEN FREE
- PACKAGE
  1: TRAY
- HOUSING COLOR
  1: BLACK
- CONTACT PLATING
  1: GOLD FLASH ON CONTACT AREA, 150u" TIN ON SOLDER AREA, 50u" NICKEL UNDERPLATED.

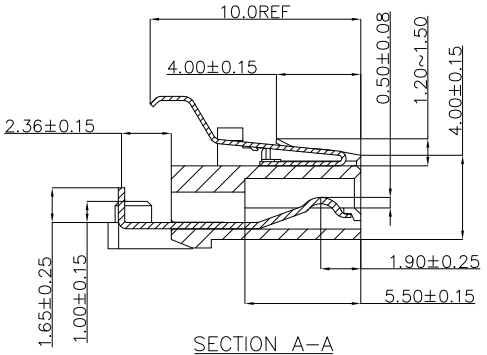

SECTION A-A
SCALE 1 : 1

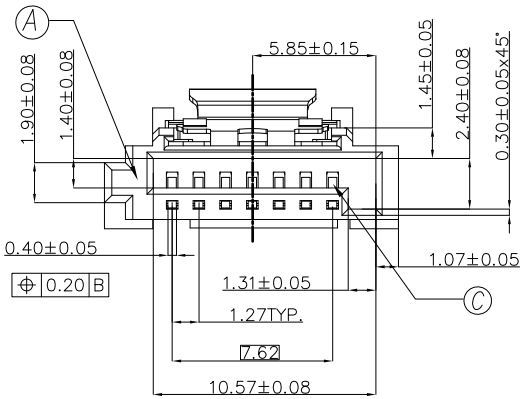

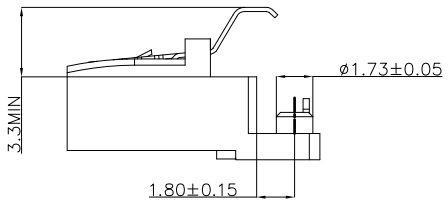

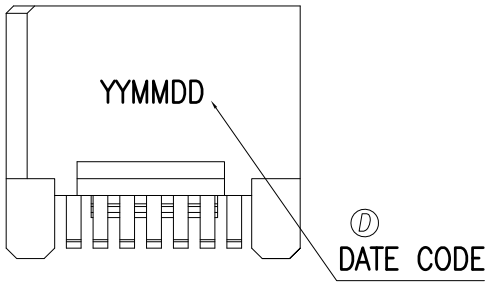

NO	DESCRIPTION	QTY	MATERIAL	PLATING & COLOR
D	INK			BLACK
C	CONTACT	7	COPPER ALLOY	SEE PART NO.
B	SPRING	1	STAINLESS STEEL	
A	HOUSING	1	HIGH TEMP. THERMOPLASTIC UL 94V-0	BLACK

UNLESS OTHERWISE SPECIFIED TOLERANCES

DECIMALS: X :±0.5, X.X :±0.3, X.XX :±0.2

ANGLES: X :±2°, X.X :±1°

Singatron Enterprise Co., Ltd.
信音企業股份有限公司

TITLE	SATA 7P RECEPTACLE, R/A, SINKING, DIP TYPE		
DWN	IVY-C 2012.02.23	PART NO. 2ST1522-000111F	
CHKD	DAVID-T 2012.02.23	SCALE 4:1	UNIT: mm
APVD	DAVID-T 2012.02.23	SIZE: A3	SHEET:1 OF 1 REV: A

CUSTOMER COPY

文件編號: RD-06-043-A