REV.	ECN NO OR DESCRIPTION	REVISED	DATE
A	PDR RELEASE	IVY-C	2011.04.11

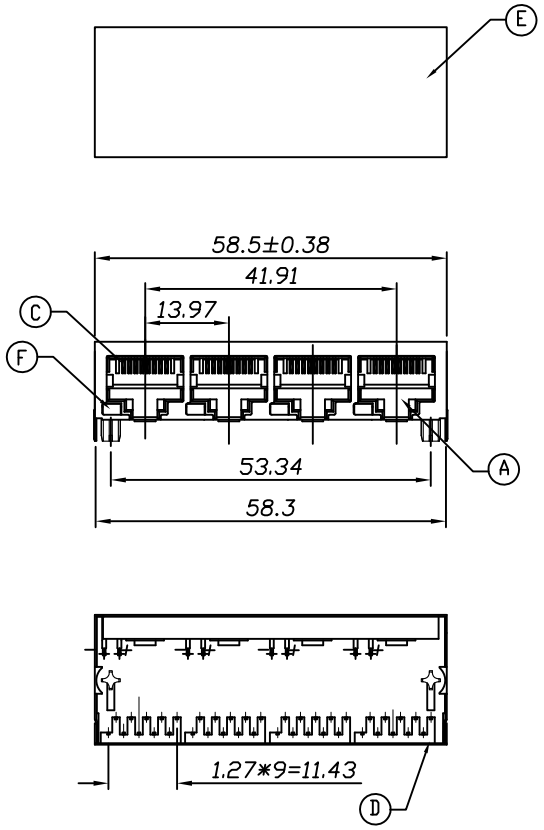

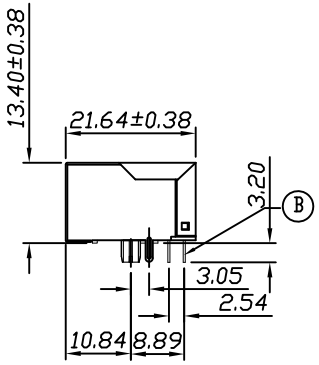

SPECIFICATIONS:

1. CONTACT RESISTANCE: 40m OHMS MAX.
2. INSULATION RESISTANCE: 500M OHMS MIN.
3. DIELECTRIC WITHSTANDING VOLTAGE: 1500V AC MIN..
4. DURABILITY: 1000 CYCLES MIN.
5. OPERATING TEMPERATURE: -40°C TO +85°C.
6. OTHER GENERAL SPEC. TO REFER "2TJ1552 SERIES SPEC".
7. TO CONFORM TO SINGATRON HAZARDOUS SUBSTANCE FREE SPEC.
8. GREEN PRODUCT IDENTIFICATION LABEL ON PACKAGING: **G.P. PASS**
9. PACKAGE: SEE "2TJ1552 SERIES" PACKAGE.
10. FOR REFLOW SOLDERING LEAD-FREE PROCESS. 260°C 10SEC.
11. MATES WITH MODULAR PLUG CONFORMING TO FCC PART 68, SUBPART F.

PART NO.

2TJ1552-000111H

- PACKAGE
  1: TRAY
- HOUSING COLOR
  1: BLACK
- CONTACT PLATING
  1: MATING AREA: GOLD FLASH
  SOLDER AREA: MATTE TIN

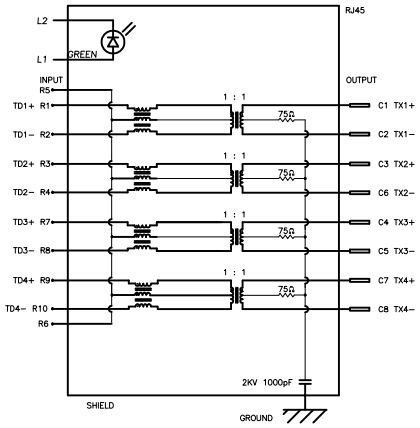

SCHEMATIC

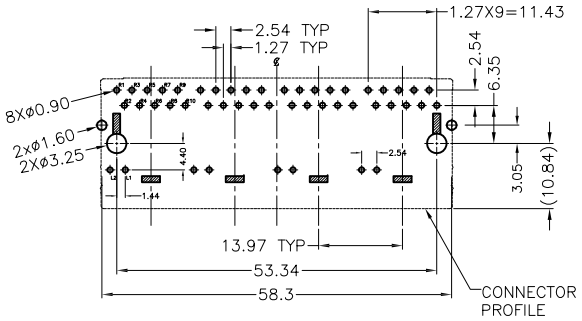

RECOMMENDED PCB LAYOUT
COMPONENT SIDE
ALL DIMENSION TOLERANCE ARE ±0.05mm UNLESS OTHERWISE SPECIFIED

NO	DESCRIPTION	QTY	MATERIAL	PLATING & COLOR
F	LED	4	LED	GREEN
E	SHIELD	1	BRASS	NICKEL
D	INSERT	4	HIGH TEMP. THERMO-PLASTIC, UL 94V-0	BLACK
C	OUTPUT CONTACT	32	PHOSPHOR BRONZE	GOLD FLASH
B	INPUT CONTACT	40	PHOSPHOR BRONZE	MATTE TIN
A	HOUSING	1	HIGH TEMP. THERMO-PLASTIC, UL 94V-0	BLACK

UNLESS OTHERWISE SPECIFIED TOLERANCES

Singatron Enterprise Co., Ltd.
信音企業股份有限公司

DECIMALS: X :±0.5, X.X :±0.3, X.XX :±0.2
ANGLES: X :±2°, X.X :±1°

TITLE	RJ45 1X4 TRANSFORMER JACK, WITH LED, WITH SHIELD		
DWN	IVY-C 2011.04.11	PART NO. 2TJ1552-000111H	
CHKD	DAVID-T 2011.04.11	SCALE 1:1	UNIT: mm
APVD	DAVID-T 2011.04.11	SIZE: A3	SHEET:1 OF 1	REV: A

CUSTOMER COPY

文件編號: RD-06-043-A