REV.	ECN NO OR DESCRIPTION	REVISED	DATE
A	PDR RELEASE	IVY-C	2014.09.05

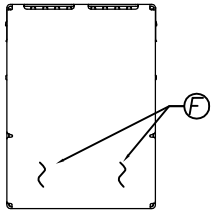

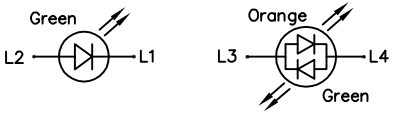

LEFT LED RIGHT LED

Emitting Color	λp (nm)	Vf @If=20mA	Ir @Vr=5V
Green	565	1.7V~2.6V	10 μA max.
Yellow	585	1.7V~2.6V	10 μA max.
Orange	610	1.7V~2.6V	10 μA max.

PART NO.
2TJ1602-000X11F

- SUFFIX: HALOGEN FREE
- PACKAGE
  1: TRAY
- HOUSING COLOR
  1: BLACK
- CONTACT PLATING
  1: GOLD FLASH PLATED ON CONTACT AREA 100u" TIN PLATED ON SOLDER AREA. 50~100u" NICKEL UNDERPLATED OVERALL
  2: Au 30u" PLATED ON CONTACT AREA 100u" TIN PLATED ON SOLDER AREA. 50~100u" NICKEL UNDERPLATED OVERALL

SPECIFICATION:
1. TO CONFORM TO SINGATRON HAZARDOUS SUBSTANCE FREE SPEC.
2. GREEN PRODUCT IDENTIFICATION LABEL ON PACKAGING:
3. PACKAGE: SEE "2TJ1602 SERIES" PACKAGE.
4. FOR REFLOW SOLDERING LEAD-FREE PROCESS.
5. MATES WITH MODULAR PLUG CONFORMING TO FCC PART 68, SUBPART F.
6. ELECTRICAL
- INSULATION RESISTANCE : 500 MOHMS MIN
- DIELECTRIC WITHSTANDING VOLTAGE : 1500 VAC FOR 1 MINUTE
7. DURABILITY TEST RATING
- INSERTION FORCE WITH THE LATCH DEPRESSED : 22N MAX
- REMOVAL FORCE WITH THE LATCH DEPRESSED : 44N MAX
- DURABILITY : 750 CYCLES
8. OPERATING AND STORAGE TEMPERATURE
- OPERATING TEMPERATURE : -40°C TO +85°C
- STORAGE TEMPERATURE : -40°C TO +85°C

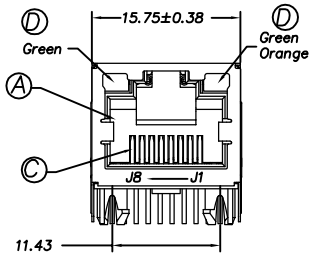

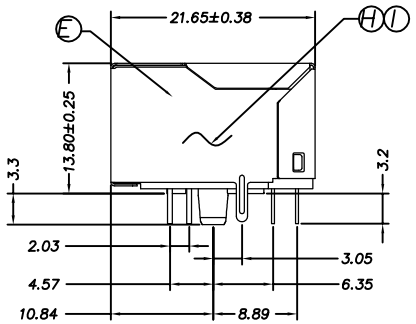

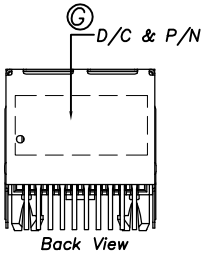

ELECTRICAL CHARACTERISTICS :

1. INSERTION LOSS :
- 1~100 MHz -1.0dB MAX.
2. RETURN LOSS(LOAD 100Ω) :
- 1~30 MHz -18dB MIN
- 30~60 MHz -16dB MIN
- 60~80 MHz -12dB MIN
- 80~100 MHz -10dB MIN
3. COMMON MODE REJECTION
- 1~100 MHz -30dB MIN
4. CROSS TALK
- 1~100 MHz -30dB MIN
5. INDUCTANCE @ 100KHz, 0.1V, 8mA DC BIAS
- (P1-P2),(P3-P4),(P7-P8),(P9-P10) : 350 uH MIN
6. DCR
- (J1-J2),(J3-J6),(J4-J5),(J7-J8) : 1.2Ω MAX
7. HI-POT TEST
- PCB SIDE TO CABLE SIDE : 1500VAC 60S OR 2250VDC 60S
8. TURNS RATION 100KHz
- (P1-P2) : (J1-J2) = 1:1 ±%5
- (P3-P4) : (J3-J6) = 1:1 ±%5
- (P7-P8) : (J4-J5) = 1:1 ±%5
- (P9-P10) : (J7-J8) = 1:1 ±%5
9. OTHER GENERAL SPEC. TO REFER "2TJ1602 SERIES SPEC".

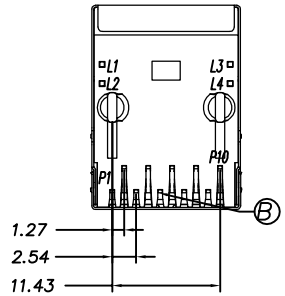

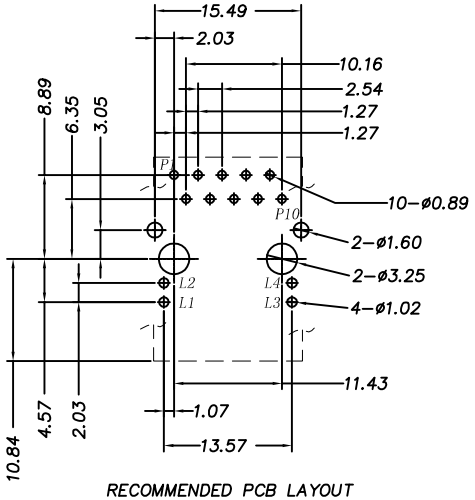

RECOMMENDED PCB LAYOUT
(COMPONENT SIDE VIEW)

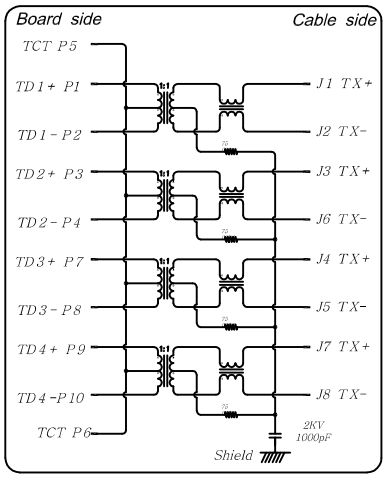

NO	DESCRIPTION	QTY	MATERIAL	PLATING & COLOR
I	PCB	1		
H	INSERT MOLD	1	HIGH TEMP THERMOPLASTIC UL 94V-0	BLACK
G	INK	-		BLACK
F	BASE	2	HIGH TEMP THERMOPLASTIC UL 94V-0	BLACK
E	SHELL	1	STAINLESS STEEL	TIN PLATED ON SOLDER AREA
D	LED	2	LED	GREEN/ GREEN/ORANGE
C	OUTPUT CONTACT	8	COPPER ALLOY	SEE PART NO.
B	INTPUT CONTACT	10	COPPER ALLOY	TIN PLATED
A	HOUSING	1	HIGH TEMP THERMOPLASTIC UL 94V-0	BLACK

UNLESS OTHERWISE SPECIFIED TOLERANCES

DECIMALS: X :±0.5, X.X :±0.3, X.XX :±0.2
ANGLES: X :±2°, X.X :±1°

Singatron Enterprise Co., Ltd.
信音企業股份有限公司

TITLE	RJ45, W/LED, W/MAGNETIC, R/A, W/SHIELD, DIP TYPE		
DWN	IVY-C 2014.09.05	PART NO. 2TJ1602-000X11F	
CHKD		SCALE2.5:1	UNIT: mm
APVD	ANGELA2014.09.05	SIZE: A3	SHEET:1 OF 1	REV: A

CUSTOMER COPY

文件編號 RD-06-043-A