REV.	ECN NO OR DESCRIPTION	REVISED	DATE
A	PDR NO T171128-1A	PAN	2018.6.20
B	ECN NO: L180049	EVEN	2019.01.25

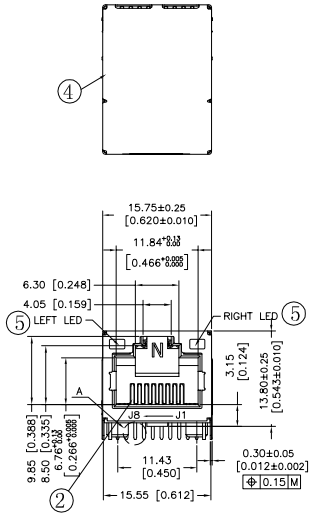

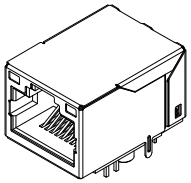

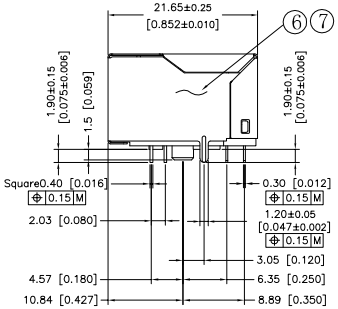

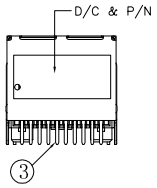

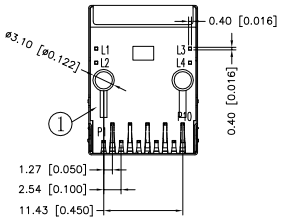

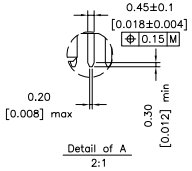

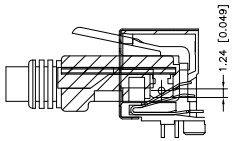

SPECIFICATIONS :

1. TO CONFORM TO SINGATRON HAZARDOUS SUBSTANCE FREE SPECIFICATION
2. HALOGEN FREE PRODUCT IDENTIFICATION LOGO ON PACKAGING:
3. ELECTRICAL
   - INSULATION RESISTANCE : 500 MOHMS MIN
   - DIELECTRIC WITHSTANDING VOLTAGE : 1500 VAC FOR 1 MINUTE
4. DURABILITY TEST RATING
   - INSERTION FORCE WITH THE LATCH DEPRESSED :21N MAX
   - REMOVAL FORCE WITH THE LATCH DEPRESSED :44N MAX
   - DURABILITY :5000 CYCLES
5. OPERATING AND STORAGE TEMPERATURE
   - OPERATING TEMPERATURE : -40°C TO +85°C
   - STORAGE TEMPERATURE : -40°C TO +85°C
6. FOR REFLOW SOLDERING LEAD-FREE PROCESS.
7. PACKAGING:TAPE&REEL

ELECTRICAL CHARACTERISTICS :

1. INSERTION LOSS :
   - 1~100 MHz -1.0dB MAX.

2. RETURN LOSS(LOAD 100Ω) :
   - 1~30 MHz -18dB MIN
   - 30~60 MHz -16dB MIN
   - 60~80 MHz -12dB MIN
   - 80~100 MHz -10dB MIN

3. COMMON MODE REJECTION
   - 1~100 MHz -30dB MIN

4. CROSS TALK
   - 1~100 MHz -30dB MIN

5. INDUCTANCE @ 100KHz, 0.1V, 8mA DC BIAS
   - (P1-P2),(P3-P4),(P7-P8),(P9-P10) : 350 uH MIN

6. HI-POT TEST
   - PCB SIDE TO CABLE SIDE : 1500VAC 60S OR 2250VDC 60S

7. TURNS RATION 100KHz
   - (P1-P2) : (J1-J2) = 1:1 ±%5
   - (P3-P4) : (J3-J6) = 1:1 ±%5
   - (P7-P8) : (J4-J5) = 1:1 ±%5
   - (P9-P10) : (J7-J8) = 1:1 ±%5

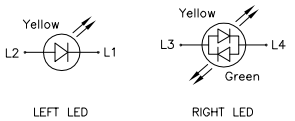

Emitting Color	λp (nm)	Vf @If=20mA	Ir @Vr=5V
Green	565	1.7V~2.6V	10μA max.
Yellow	585	1.7V~2.6V	10μA max.

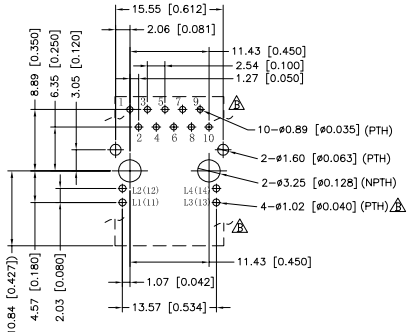

RECOMMENDED PCB LAYOUT
(COMPONENT SIDE VIEW)

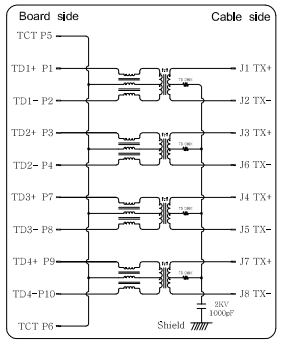

NO	DESCRIPTION	QTY	MATERIAL	PLATING & COLOR
7	PCB	1		
6	Case	1	LCP UL 94V-0 HF	Black
5	LED	2	LED	YELLOW;YELLOW/GREEN
4	Shield	1	SUS304 1/2H	Tin PLATED ON SOLDER AREA
3	Input Terminal	10	C2680	Tin PLATED
2	RJ Terminal	8	C5210	Gold Flash
1	Housing	1	LCP UL 94V-0 HF	Black

UNLESS OTHERWISE SPECIFED TOLERANCES

DECIMALS: X :±0.5, X.X :±0.3, X.XX :±0.2

ANGLES: X :±2°, X.X :±1°

Singatron Enterprise Co., Ltd.
信音企業股份有限公司

TITLE	RJ45 IMC,1000BASE-T,W/LED			
DWN	EVEN 2019.01.25	PART NO.2TJ1610-005111F		
CHKD		SCALE:1:1	UNIT: mm	
APVD	ANGELA2019.01.25	SIZE: A3	SHEET:1 OF 1	REV:B

CUSTOMER COPY

文件編號:RD-06-043-A