| REV. | ECN NO OR DESCRIPTION | REVISED | DATE |
|---|---|---|---|
| A | PDR NO.:S131017-14A | Shawn | 2014.02.10 |

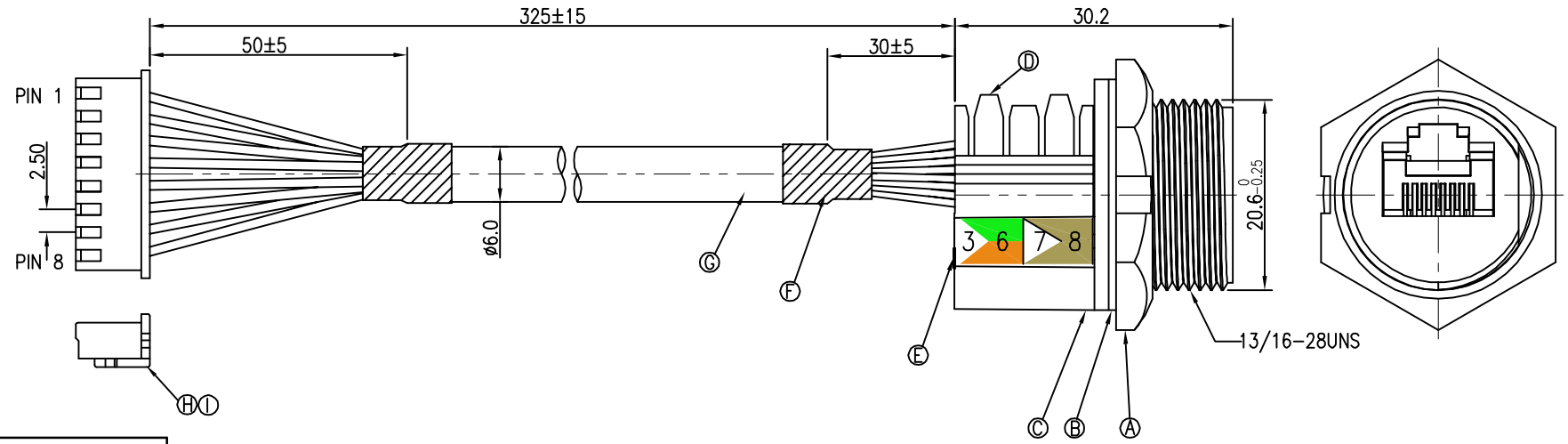


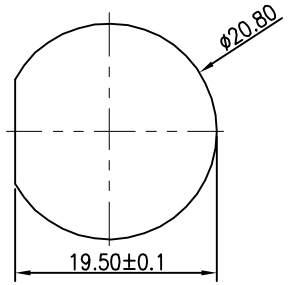


RECOMMENDED PANEL CUT-OUT

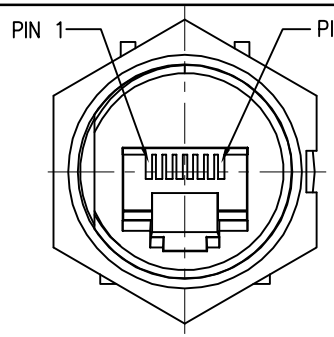


PIN ASSIGNMENTS FRONT VIEW

NOTES:
1. WATERPROOF RATE: IP67(WHEN PROPERLY MATED)
   IP67: IMMERSED IN 1M WATER FOR 30 MINUTES
2. RATING:125V 1.5A
3. OTHER GENERAL SPEC. TO REFER "RJ45 SERIES SPEC".
4. TO CONFORM TO SINGATRON HAZARDOUS SUBSTANCE FREE SPEC.
5. GREEN PRODUCT IDENTIFICATION LABEL ON PACKAGING: G.P. PASS
6. FOR PANEL THICKNESS MAX OF 3.5mm

| HOUSING | WIRE COLOR | CONN | |
|---|---|---|---|
| 8 | ORANGE/WHITE | 8 | TWIST |
| 7 | ORANGE | 7 | |
| 6 | GREEN/WHITE | 6 | TWIST |
| 5 | BLUE | 5 | TWIST |
| 4 | BLUE/WHITE | 4 | |
| 3 | GREEN | 3 | |
| 2 | BROWN/WHITE | 2 | TWIST |
| 1 | BROWN | 1 | |

PIN OUT

| NO | DESCRIPTION | QTY | MATERIAL | PLATING & COLOR |
|---|---|---|---|---|
| I | TERMINAL | 8 | BRASS | TIN-PLATED |
| H | HOUSING | 1 | NYLON 66 UL 94V-0 | WHITE |
| G | CABEL | 1 | CAT5E FTP 24#*4P+MY+D +A/M UV RESISTANT | BLACK(PVC JACKET) |
| F | HEAT SHRINK TUBE | 2 | 125° 300V L20 | BLACK |
| E | LABEL | 1 | P/N:4TJ3003-W0000F | N/A |
| D | PCB | 1 | P/N:4TJ3003-W0000P | N/A |
| C | CLIP SOCKET | 1 | PPE | BLACK |
| B | GASKET | 1 | EPDM | BLACK |
| A | NUT | 1 | PPE | BLACK |

UNLESS OTHERWISE SPECIFED TOLERANCES

DECIMALS: X :±0.5, X.X :±0.3, X.XX :±0.2

ANGLES: X :±2°, X.X :±1°

Singatron Enterprise Co., Ltd.
信音企業股份有限公司

| | | | |
|---|---|---|---|
| TITLE | RJ45 KEYSTONE JACK +CABLE | | |
| DWN | Shawn | PART NO.2TJ3003-W05155H | |
| CHKD | Harlen | SCALE 2:1 | UNIT: mm |
| APVD | Quan | SIZE: A3 | SHEET:1 OF 1 REV: A |

CUSTOMER COPY

文件編號:RD-06-043-A