REV.	ECN NO OR DESCRIPTION	REVISED	DATE
A	PDR NO.:A180712-5A	Vicky	2018.07.25

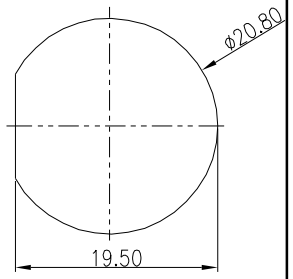

RECOMMENDED PANEL CUT-OUT

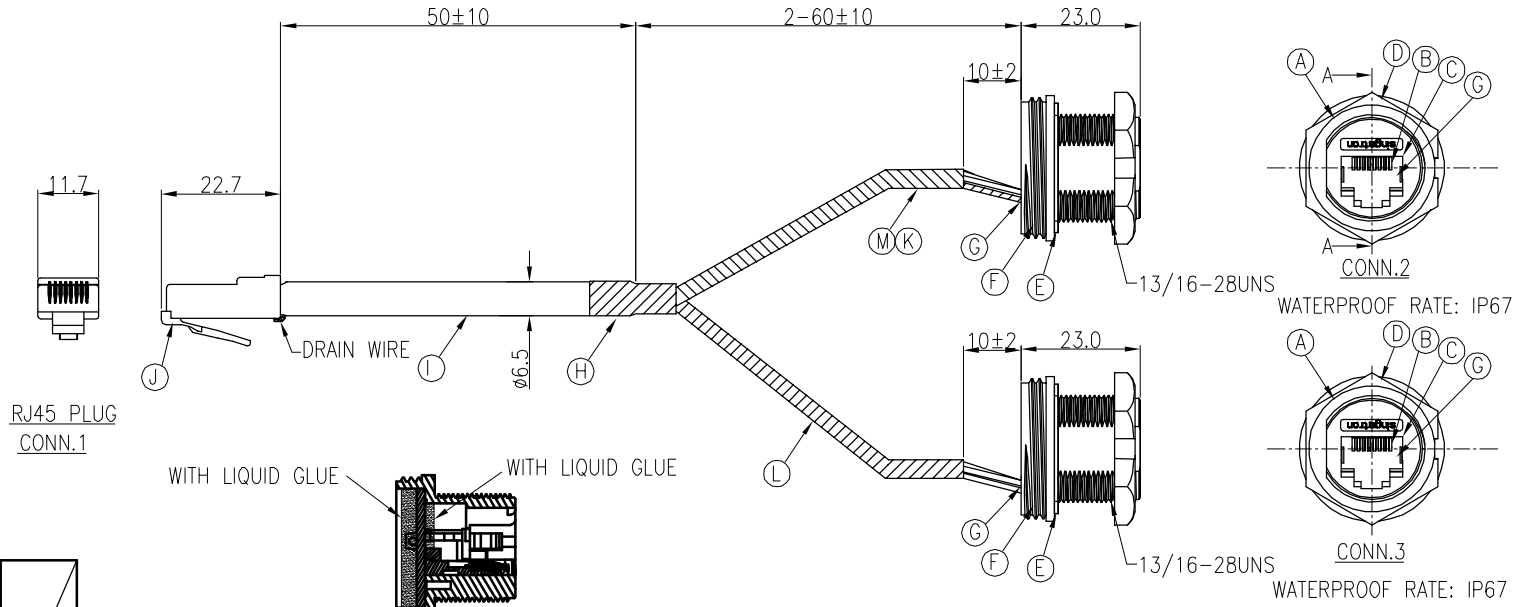

RJ45 PLUG
CONN.1

A-A SECTION

SHIELD	DRAIN	SHIELD	
1	ORANGE/WHITE	1	
2	ORANGE	2	
3	GREEN/WHITE	3	
4	BLUE	4	
5	BLUE/WHITE	5	
6	GREEN		6
7	BROWN/WHITE		7
8	BROWN		8
CONN.1	WIRE COLOR	CONN.2	CONN.3

PIN OUT

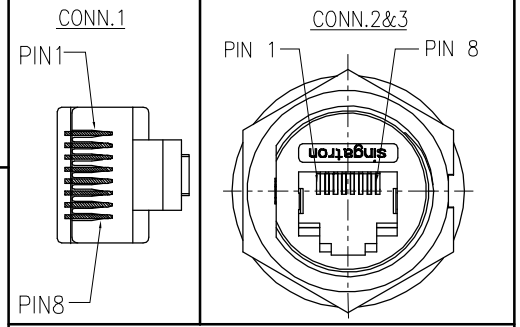

PIN ASSIGNMENTS
FRONT VIEW

NOTES:
1. WATERPROOF RATE: IP67
   IP67: IMMERSED IN 1M WATER FOR 30 MINUTES
2. RATING:125V 1.5A
3. OTHER GENERAL SPEC. TO REFER "RJ45 SERIES SPEC".
4. TO CONFORM TO SINGATRON HAZARDOUS SUBSTANCE FREE SPEC.
5. GREEN PRODUCT IDENTIFICATION LABEL ON PACKAGING: G.P. PASS
6. FOR PANEL THICKNESS MAX OF 5.5mm

NO	DESCRIPTION	QTY	MATERIAL	PLATING & COLOR
M	HEAT SHRINK TUBE	1	ø4.0 125°C 300V	RED
L	HEAT SHRINK TUBE	1	ø2.5 125°C 300V	BLACK
K	HEAT SHRINK TUBE	1	ø1.0 125°C 300V	BLACK
J	RJ45 PLUG	1	8P8C SHIELD	GOLD PLATING
I	CABEL	1	CAT5E FTP 24#*4P+MY+D +A/M UV RESISTANT	BLACK(PVC JACKET)
H	HEAT SHRINK TUBE	1	ø7.0 125°C 300V L=15	BLACK
G	LIQUID GLUE	4	N/A	BLACK
F	SCREW	2	SUS 304	N/A
E	GASKET	2	EPDM	BLACK
D	NUT	2	PA66	BLACK
C	GROUND	4	BRASS	NICKEL PLATING
B	PCB	2	FR-4	GREEN
A	HOUSING	2	NYLON+GF	BLACK

UNLESS OTHERWISE SPECIFED TOLERANCES

DECIMALS: X :±0.5, X.X :±0.3, X.XX :±0.2
ANGLES: X :±2°, X.X :±1°

Singatron Enterprise Co., Ltd.
信音企業股份有限公司

TITLE	RJ45 FRONT MOUNT CONN.+PLUG		
DWN	Vicky	PART NO.2TJ3003-W051E2H	
CHKD	JF	SCALE 2:1	UNIT: mm
APVD	William	SIZE: A3	SHEET:1 OF 1	REV: A

CUSTOMER COPY

文件編號 RD-06-043-A