REV.	ECN NO OR DESCRIPTION	REVISED	DATE
A	PDR NO.:A190307-5A	JF	2021.02.05

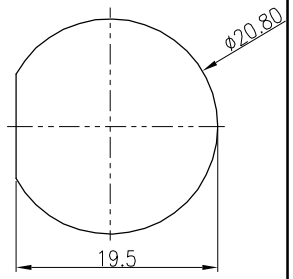

RECOMMENDED PANEL CUT-OUT

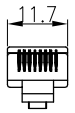

RJ45 PLUG
CONN.2

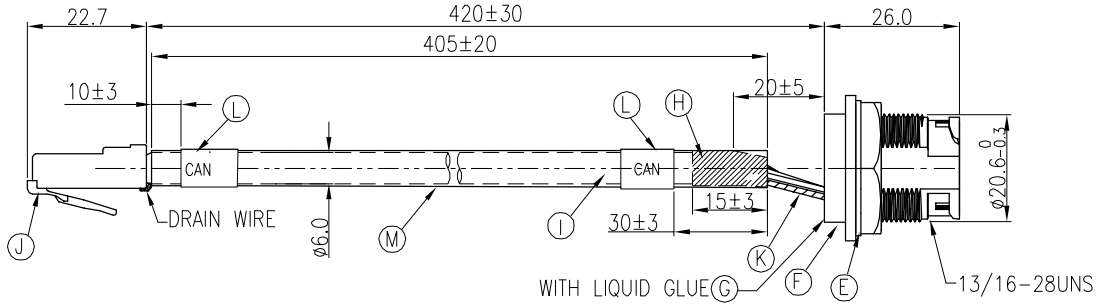

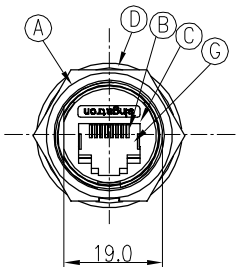

CONN.1
WATERPROOF RATE: IP67

SHIELD	DRAIN	SHIELD
1	ORANGE/WHITE	1
2	ORANGE	2
3	GREEN/WHITE	3
4	BLUE	4
5	BLUE/WHITE	5
6	GREEN	6
7	BROWN/WHITE	7
8	BROWN	8
CONN.1	WIRE COLOR	CONN.2

TWIST
TWIST
TWIST
TWIST

PIN OUT

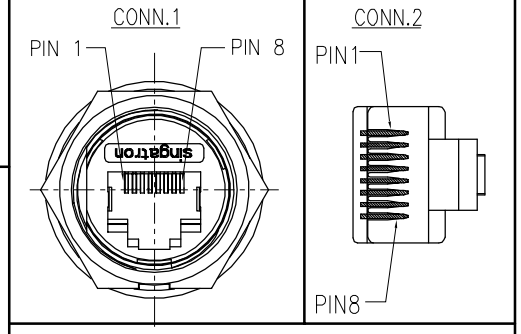

PIN ASSIGNMENTS
FRONT VIEW

NOTES:
1. WATERPROOF RATE: IP67
   IP67: IMMERSED IN 1M WATER FOR 30 MINUTES
2. RATING:125V 1.5A
3. OTHER GENERAL SPEC. TO REFER "RJ45 SERIES SPEC".
4. TO CONFORM TO SINGATRON HAZARDOUS SUBSTANCE FREE SPEC.
5. GREEN PRODUCT IDENTIFICATION LABEL ON PACKAGING:
6. FOR PANEL THICKNESS Max. OF 7.0mm

NO	DESCRIPTION	QTY	MATERIAL	PLATING & COLOR
M	TUBE	1	NS-GF200RES	WHITE
L	TUBE	2	125°C 600V	WHITE
K	TUBE	1	125°C 300V	BLACK
J	RJ45 PLUG	1	8P8C SHIELD	GOLD PLATING
I	CABEL	1	UL CAT5E FTP 24#* 4P+D+AL/MY OD:6.0	BLACK(PVC JACKET)
H	TUBE	1	125°C 300V	BLACK
G	LIQUID GLUE	2	N/A	BLACK
F	SCREW	1	ST2.2*5.0	N/A
E	GASKET	1	SILICONE	BLACK
D	NUT	1	NYLON+GF	BLACK
C	GROUND	2	BRASS	NICKEL PLATING
B	RJ45	1	N/A	GOLD PLATING
A	HOUSING	1	NYLON+GF	BLACK

UNLESS OTHERWISE SPECIFED TOLERANCES

DECIMALS: X :±0.5, X.X :±0.3, X.XX :±0.2
ANGLES: X :±2°, X.X :±1°

Suzhou Singatron Auto Electronics CO.,LTD.
蘇州信音汽車電子有限公司

TITLE	RJ45 FRONT MOUNT CONN.+PLUG			
DWN	JF	PART NO.2TJ3003-W051G3H		
CHKD	Cerry	SCALE 2:1	UNIT: mm	
APVD	William	SIZE: A3	SHEET:1 OF 1	REV: A

CUSTOMER COPY

文件編號 RD-06-043-A