APPROVAL SHEET

To：

Customer P/N：

Singatron P/N： 2TJRH1-ZZ-0035

Description： RJ45 Over USB 3.1 Gen 1

Through Hole

10/100/1000 Base-T

Contact Area： 30μ" Min. Gold

LED：L-Green/Orange; R-Orange

RoHS

Spec No.	Update Date	Revision
RH119015-00	2019/4/4	A

Approved	Checked	Prepared

SINGATRON U.S.A.
13925 MAGNOLIA AVE
CHINO, CA 91710 USA

Revision History

Issue Date	Revision	Comments	Operator
2019/4/4	A	Initial Release .	Cgh

1. MECHANICAL DIMENSION

Product Dimension

Unit:mm	General Tolerance :	X.X : ± 0.38 X.XX : ± 0.20

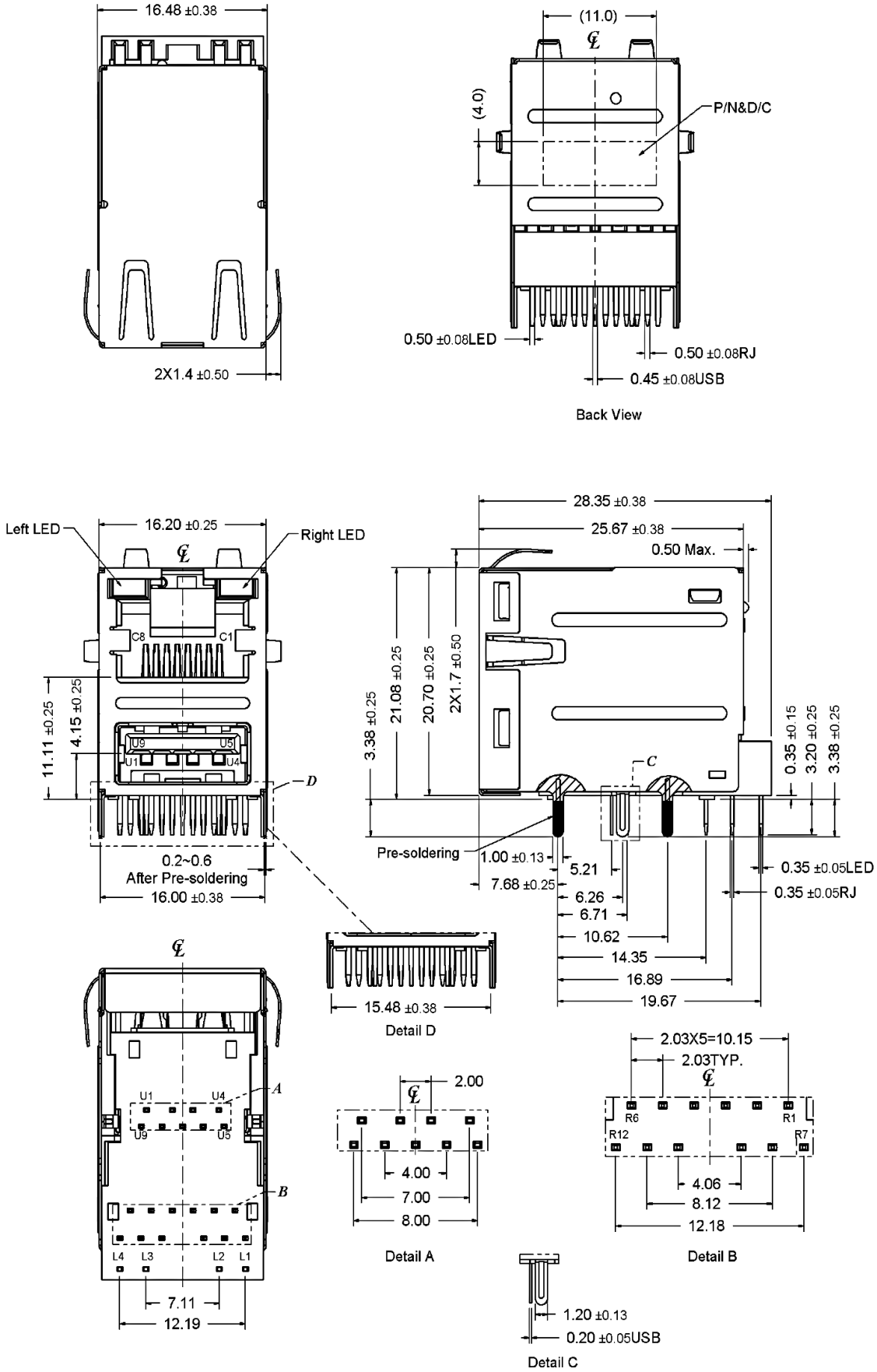

Recommended PCB Layout. Component side of board

All dimension units are "mm".

All dimension tolerances are ±0.05mm unless otherwise specified.

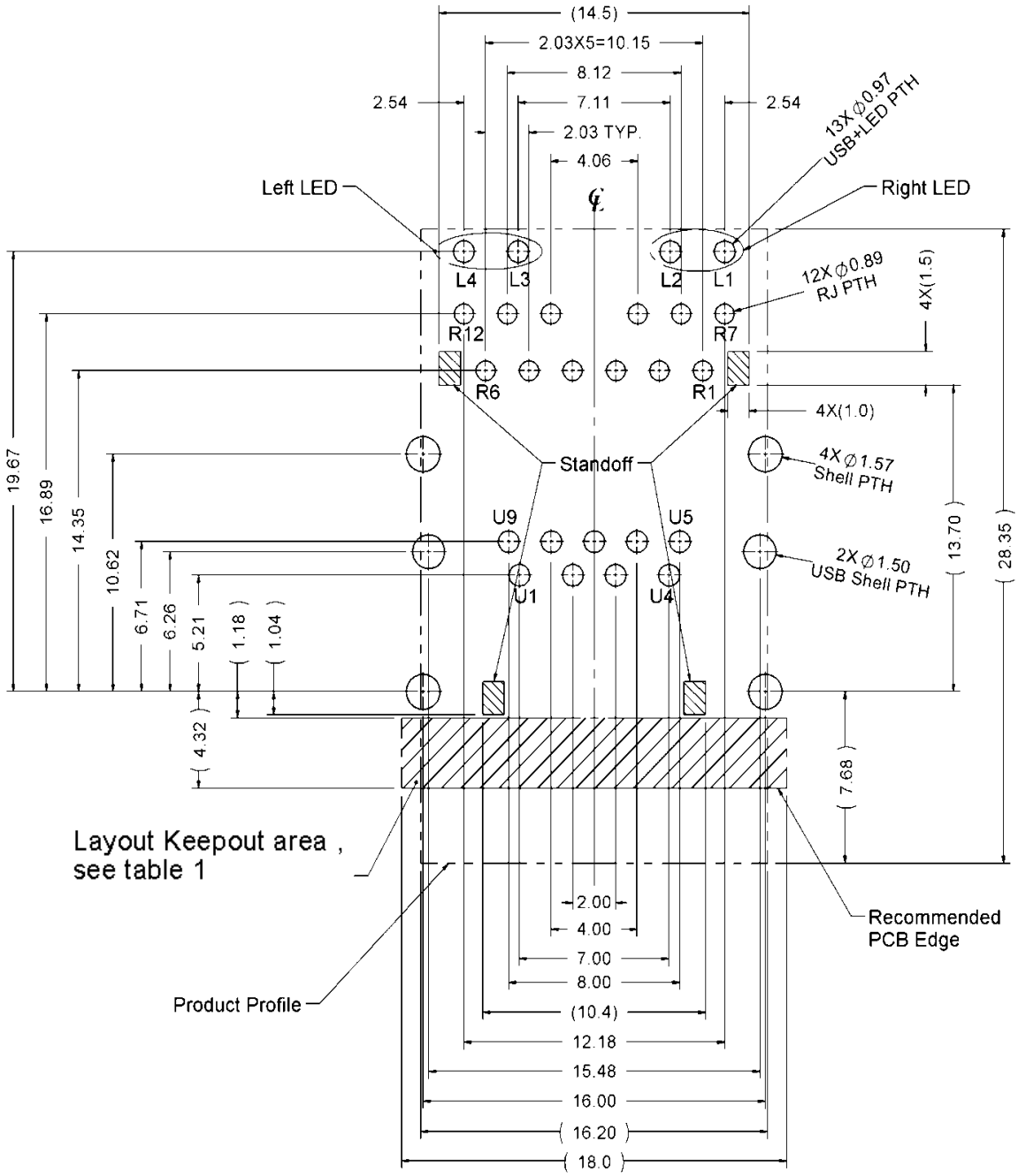

Table1

Layer \ Layout	Trace	component	Grounding	Test Point	Via Hole	PTH	NPTH
Component side	X	X	O	X	X	X	O
Inner layer	O	NA	O	NA	O	X	O
Bottom side	O	O	O	O	O	X	O

X--Forbid; O--OK; NA--Not Applicable.

Recommended Panel cutout

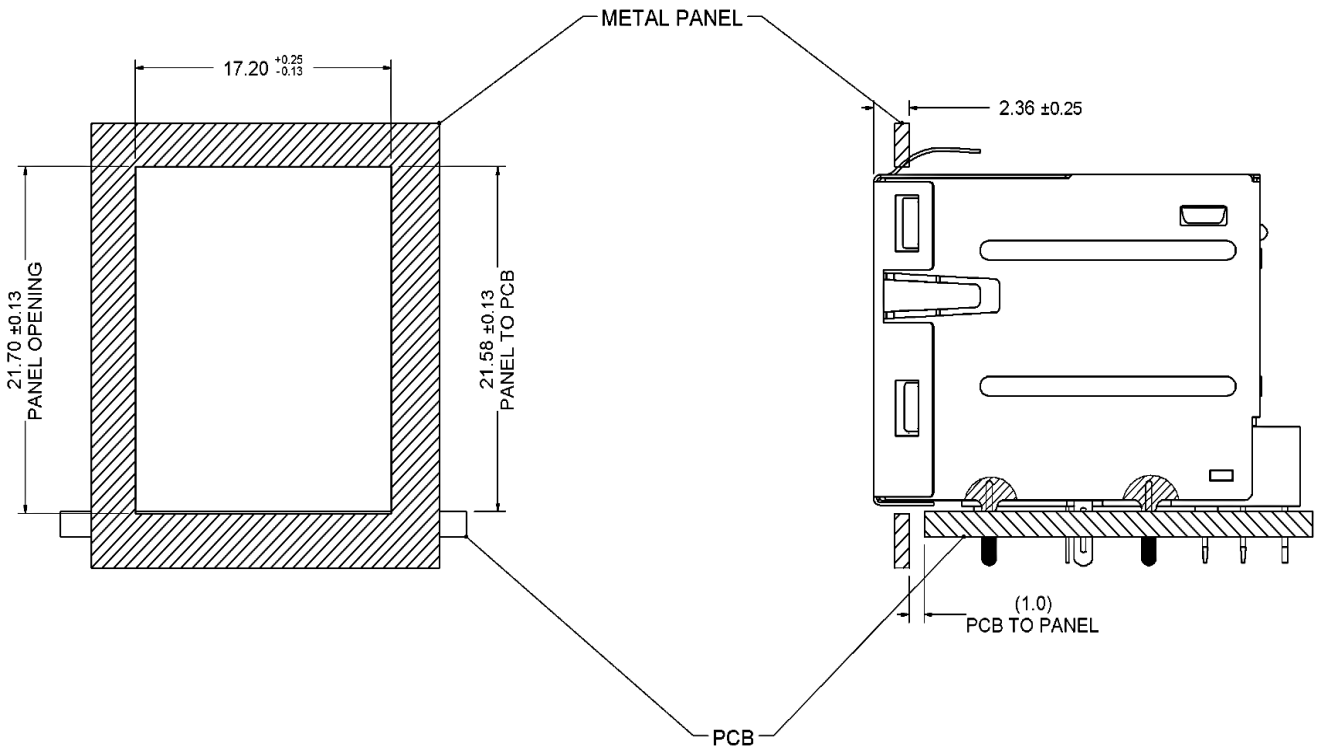

2. Packing Information

40 pcs finished goods per tray

7 trays(280 pcs finished goods) per inner box

4 Inner boxes(1120 pcs finished goods) per master carton

3. Standard RJ45 Plug Specification

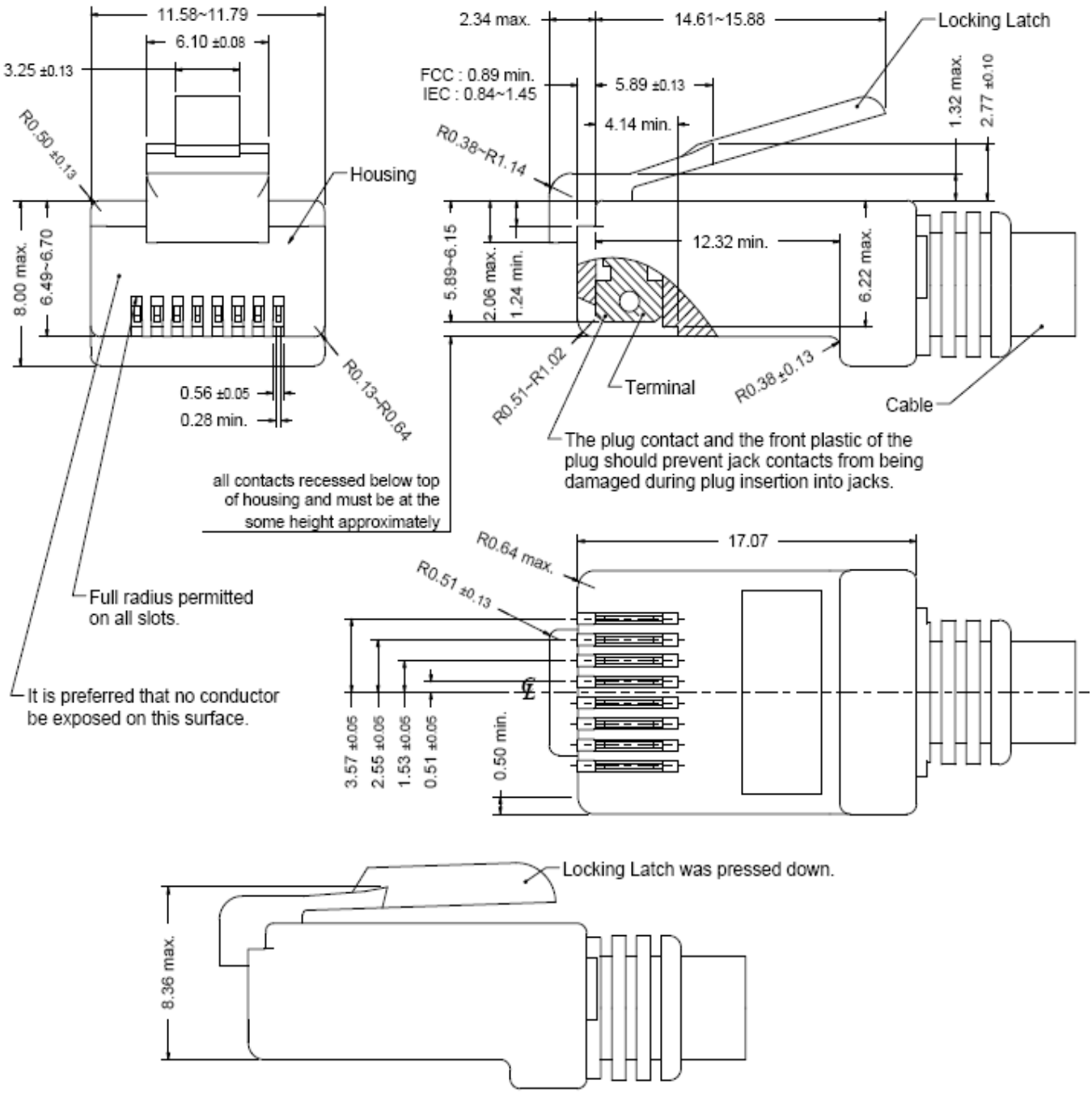

- All dimensions follow :
  FCC subpart F, 68,500, Figure (C)(2)(i) & (C)(2)(ii) & (C)(3)(i)
  IEC 60603-7
- All plugs must be meeting the requirements of plug Go & No-Go gauge.
  Gauge follow : FCC subpart F, 68,500, Figure (C)(4)(i) & (C)(5)(i)
- There must be no damage to Housing and Locking Latch.
- There must be no nicks and cuts in cable.
- Durability : 750 cycles generally

4. USB 3.1 Standard-A Plug Specification

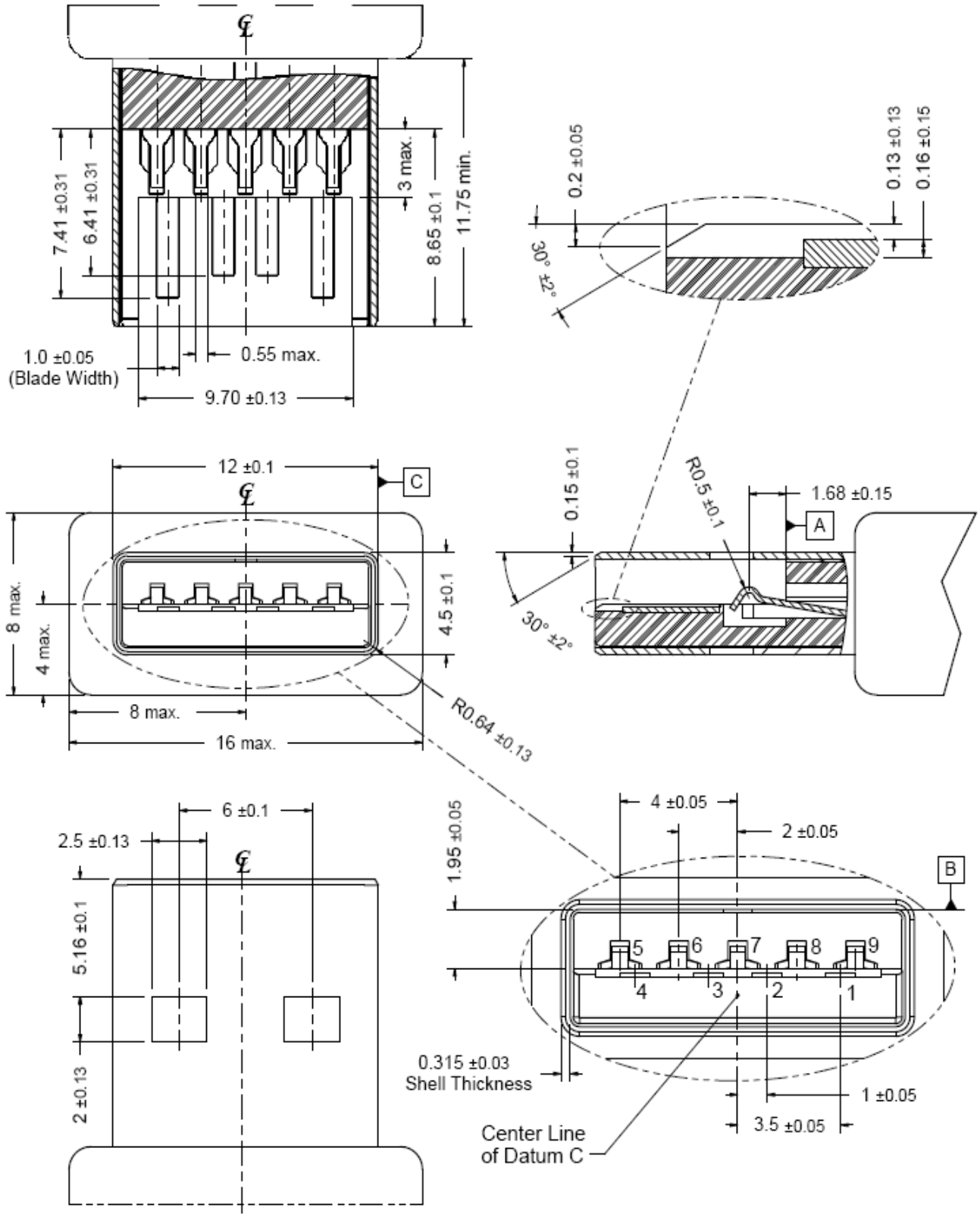

- All dimensions follow : Universal Serial Bus 3.0 Specification, Revision 1.0.
  Figure 5-2. USB 3.1 Standard Plug-A interface dimensions
- Non-dimensions geometry for reference only, subjece to change.
- Drawing for mating interface dimensions only.

5. REQUIREMENTS

Design and Construction

Product shall be of design, construction and physical dimensions specified on applicable.

Material

Terminal Parts (Terminal：Underplating :50μ" min. Nickel overall)

RJ Terminal :Phosphor Bronze, Thickness=0.30mm

Finish Contact Area : 30u" min.Gold

Solder Tail : 100μ" min. Matte.Tin

USB 2.0&3.1 Gen 1 Terminal : Brass, Thickness=0.20mm

Finish Contact Area : 30u" min.Gold

Solder Tail : 100μ" min.Matte. Tin

Input Terminal : Brass, Thickness=0.35mm

Finish : 100μ" min. Matte.Tin

Module Terminal : Brass, Thickness=0.30mm

Finish : 100μ" min. Matte.Tin

Plastic Parts <UL94V-0>

Housing : PA6T, Black

Case : PA6T, Black

USB Housing : PA9T,Blue(300C)

USB Spacer： PA9T, Blue(300C)

Spacer： PA6T, Black

Shield Parts

Front Shield : Stainless steel, Thickness=0.20mm, unplating

Back Shield : Stainless steel, Thickness=0.20mm, Pre-soldering

USB Shield :Stainless steel, Thickness=0.25mm

6. Operating and Storage Temperature

Operating Temperature : 0°C to +70°C

Storage Temperature : -40°C to +85°C

7. RJ45 specifications

Insulation Resistance : 500MΩ min.

Insertion force with the latch depressed : 20N max.

Removal force with the latch depressed : 20N max.

Locking Force of Plug Latch : 50N min. @ 60+/-5 sec.

Durability : 2500 cycles

8. USB 3.1 Gen1 specifications

Insulation Resistance : 100MΩ min.

Dielectric Withstanding Voltage : 100VAC @1min

Insertion force : 35N max

Removal force : The connector extraction force shall not be less than 10N initial and 8N after the specified insertion/extraction or durability cycles

Durability : 1500 cycles

9. Performance and Test Description

Product is designed to meet electrical, mechanical and environmental performance requirements specified in below table.

All tests are performed at ambient environmental conditions per MIL-STD-1344A and EIA-364 unless otherwise specified.

10 Packaging and Packing

All parts shall be packaged and packed to protect against physical damage, corrosion and deterioration during shipment and storage.

11. USB 3.1 GEN 1 Standard-A Schematic

USB 3.1 GEN 1 Standard-A connector Pin Assignment

Pin Number	Signal Name	Description	Mating Sequence
U1	VBUS	Power	Second
U2	D-	USB 2.0 Differential pair	Third
U3	D+		
U4	GND	Ground for power return	Second
U5	StdA_SSRX-	Super speed receiver differential pair	Last
U6	StdA_SSRX+		
U7	GND_DRAIN	Ground for Signal return	
U8	StdA_SSTX-	Surper speed transmitter differential pair	
U9	StdA_SSTX+		
Shell	Shield	Connector metal shell	First

12. ELECTRICAL CHARACTERISTCS @25℃

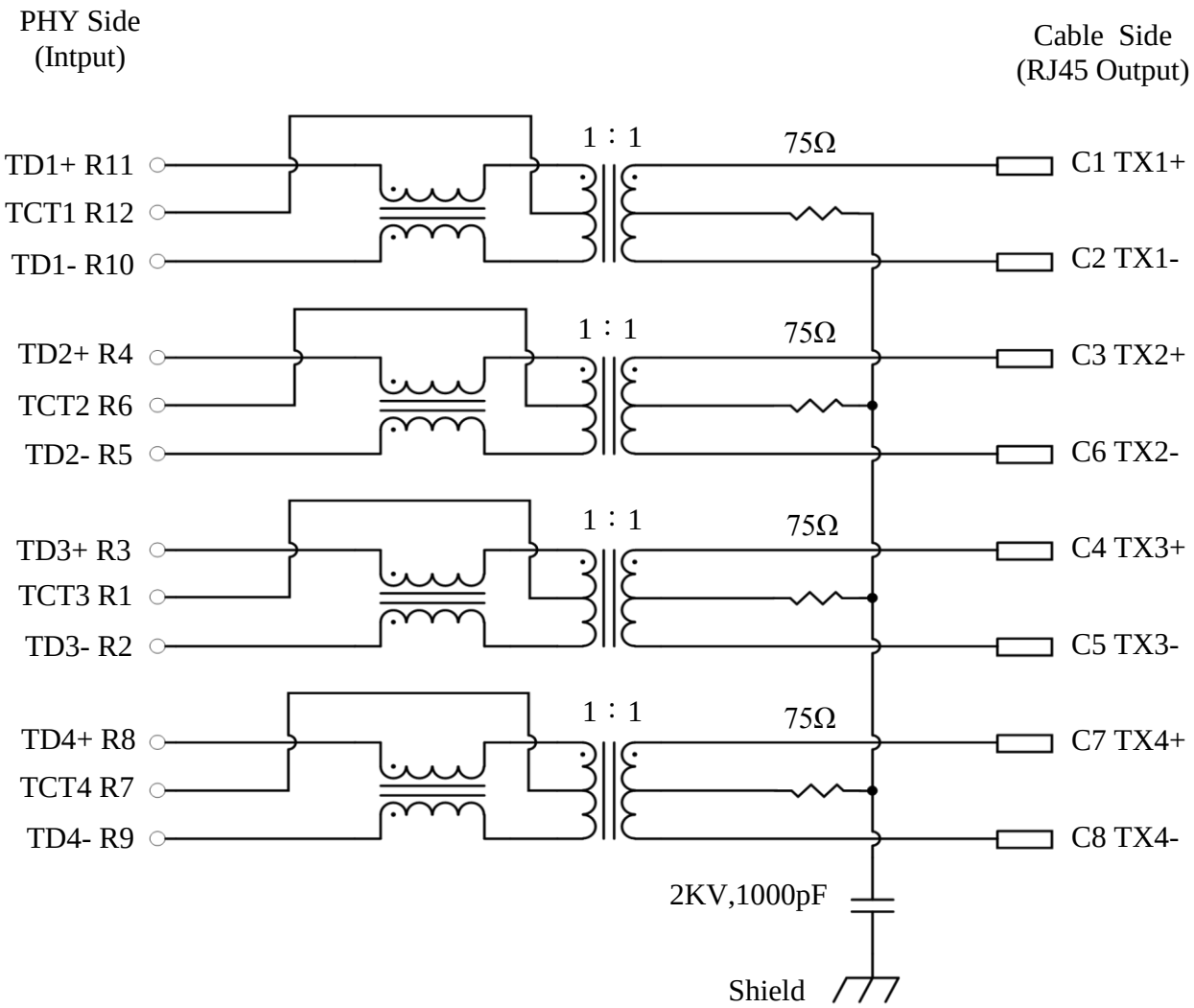

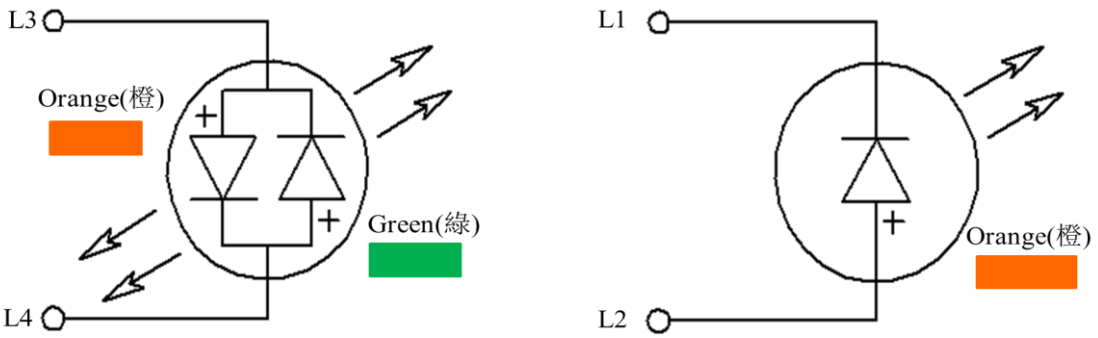

Emitting Color	λp (nm)	Vf @If=20mA	Ir @Vr=5V
Green	570	1.7 ~2.6 V	10μA max.
Orange	605	1.7 ~2.6 V	10μA max.

Transmitter filter & Receiver filter

Type : Balance low pass 100Ω impedance

Insertion loss :	1~100MHz	-1.0dB max.	
Return loss :	1~30MHz	-18dB min.	load 100Ω
	30~60MHz	-16dB min.	load 100Ω
	60~80MHz	-12dB min.	load 100Ω
	80~100MHz	-10dB min.	load 100Ω

Common Mode Rejection

@1~100 MHz -30dB min.

Cross Talk

@ 1~100MHz -30dB min.

Inductance (OCL) @ 100KHz, 0.1V, 8mA DC BIAS

Input(TD1+,TD1-); (TD2+,TD2-); (TD3+,TD3-); (TD4+,TD4-) : 350 μH min.

HiPot Test

PHY Side(input) To Cable Side(output) : 1500Vac 60s or 2250Vdc 60s

13. WAVE SOLDERING TEMPERATURE PROFILE
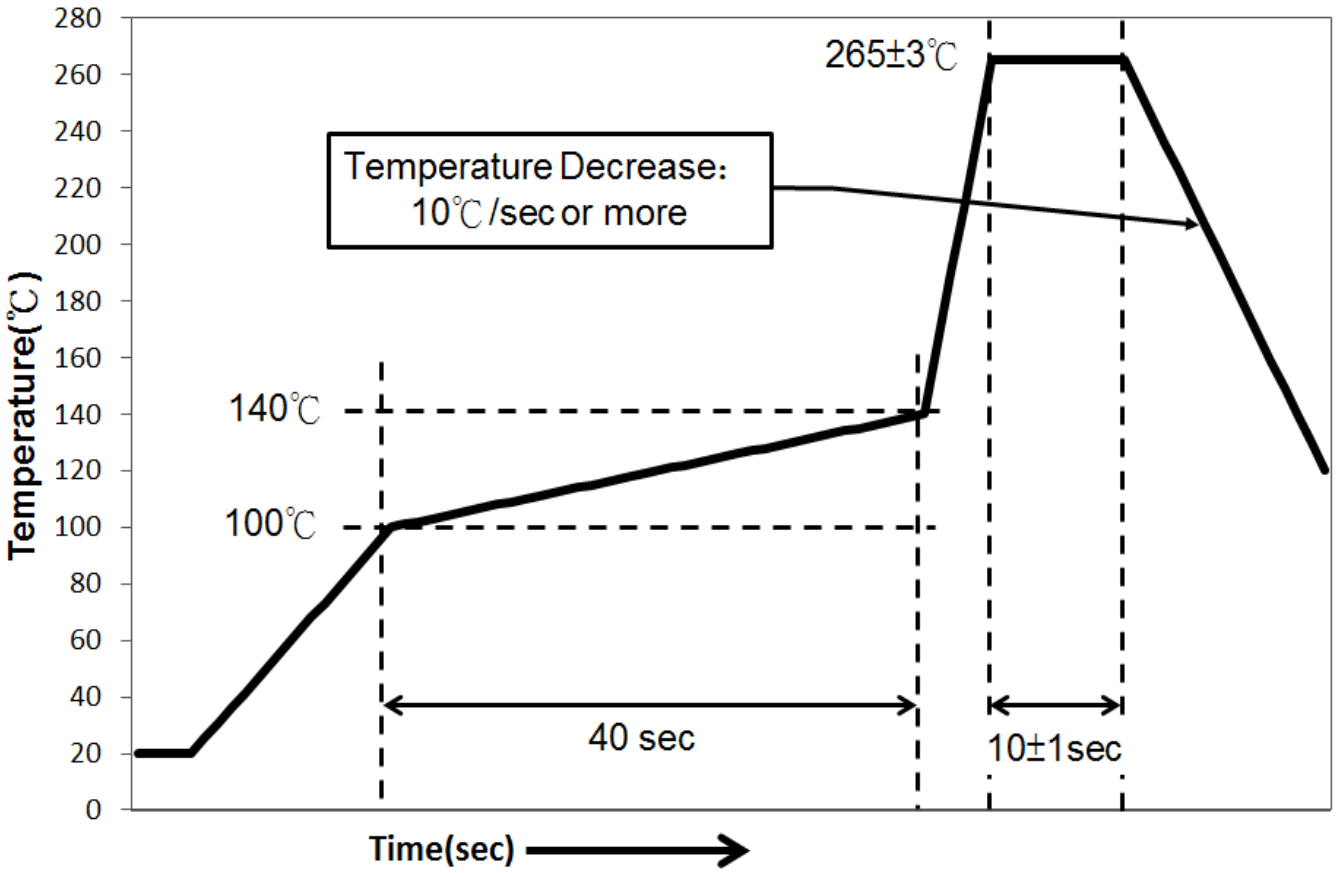
Note：
The measuring point for the specified temperature shall be on the soldered part of the lead.