IPX7

RoHS Compliant

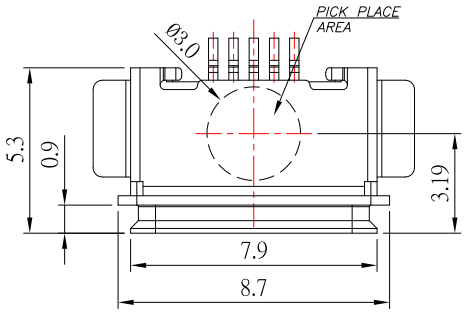

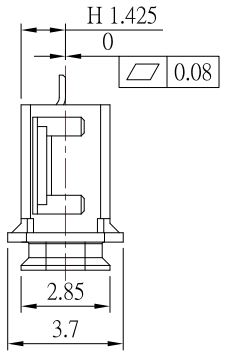

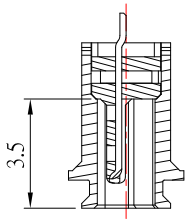

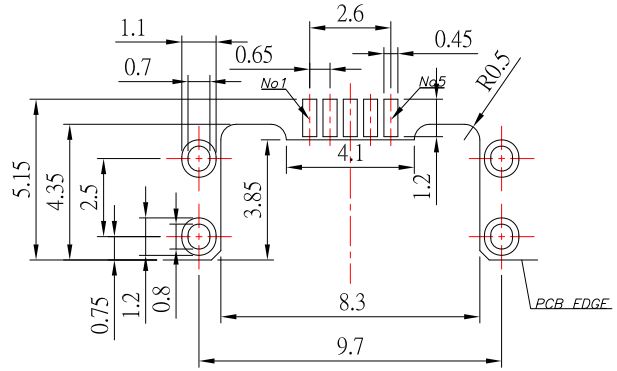

P.C.B LAYOUT MOUNTING PATTERN

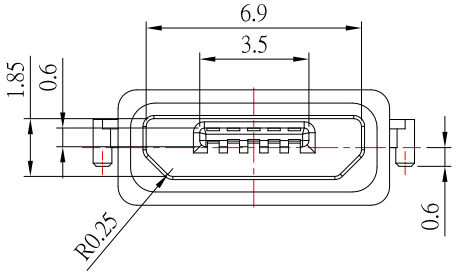

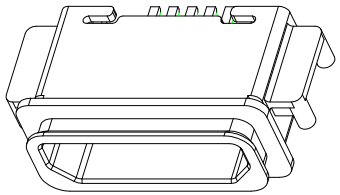

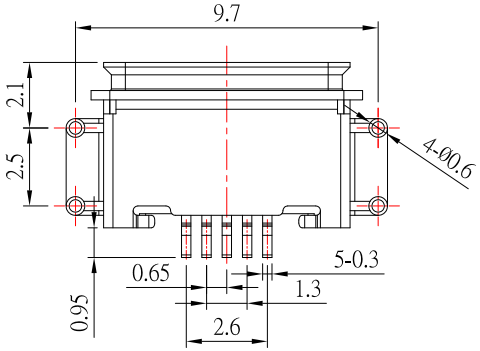

2UB-5B-WP11-x-S382

鍍層厚度：

Blank : 1u"
2 : 15u"
3 : 30u"

NOTES:

MATERIAL:

1.1 HOUSING: HIGH-TEMP

1.2 CONTACT: COPPER ALLOY

1.3 SHELL: SUS

FINISH:

2.1 CONTACT: PLATED GOLD IN MATING AREA ;
GOLD PLATED ON SOLDER BALLS ;
NICKEL UNDER PLATED OVERALL

2.2 SHELL: NICKEL UNDER PLATED SURFACE LAYER

3.SPECIFICATION:

3.1 RATING: 1.8A(PIN1&5) , 0.5A(PIN2&3&4)

3.2 DIELECTRIC WITHSSTANDING VOLTAGE: 100 VAC

3.3 CONTACT RESISTANCE: 30 mΩ MAX.

3.4 INSULATION RESISTANCE: 1000 MΩ MIN.

ITEM NO.	DESCRIPTION	DRAWN	DATE
3	更新圖面	Jack	061118
2	更新圖面	Jack	051418
1	更新爲A0版	Jack	041018

TOLERANCE UNLESS OTHERWISE STATED :

Up to 5	±0.2
Above 5 ~ 15	±0.3
Above 15 ~ 30	±0.4
Above 30 ~ 50	±0.5
Angle	±0.3°

Singatron Enterprise Co., Ltd.

TITLE	MICRO USB 5PF B TYPE 沉板 板上 H 1.42 IPX7		
DWN	Jack Lu 06/11/18	PART NO.	2UB-5B-WP11-x-S382
CHKD	Jacky Chen 06/11/18	SCALE 1:1	UNIT: mm
APVD	Tony Kao 06/11/18	SIZE: A3	SHEET: 1 of 2
			REV: R3

CUSTOMER COPY

文件編號 RD-06-043-A

IPX7

RoHS Compliant

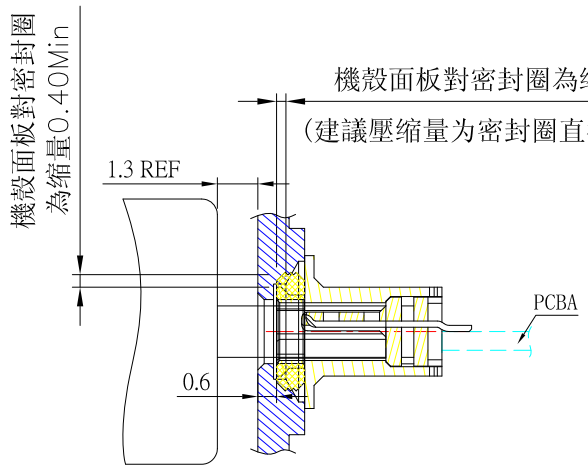

COMPRESSION RATIO TO BE 40%-50%

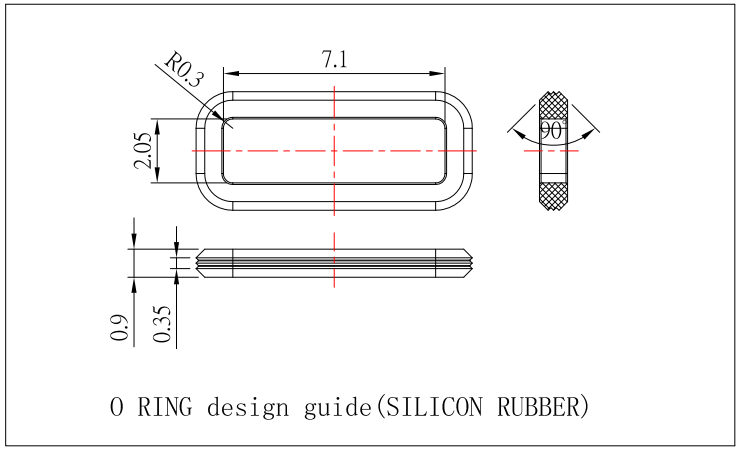

O RING design guide(SILICON RUBBER)

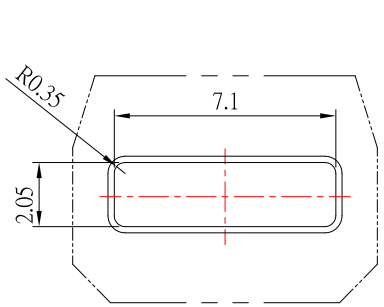

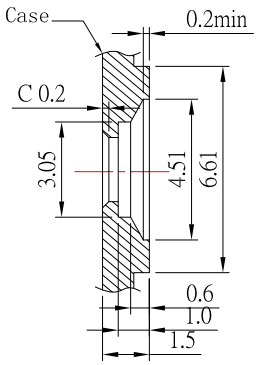

RECOMMENDED OPEN DIMENISION OF CASE

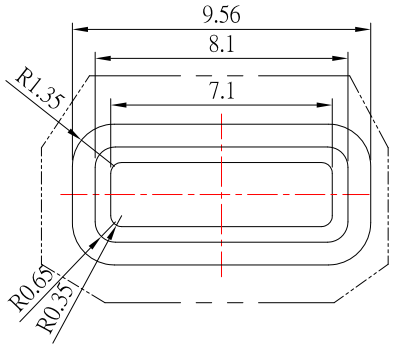

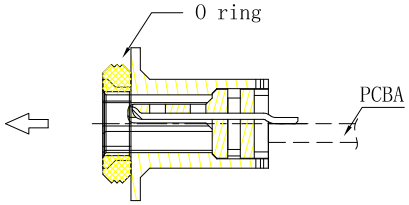

Assembly direction

ITEM NO.	DESCRIPTION	DRAWN	DATE
3	更新圖面	Jack	061118
2	更新圖面	Jack	051418
1	更新爲A0版	Jack	041018

TOLERANCE UNLESS OTHERWISE STATED :

Up to 5	±0.2
Above 5 ~ 15	±0.3
Above 15 ~ 30	±0.4
Above 30 ~ 50	±0.5
Angle	±0.3°

Singatron Enterprise Co., Ltd.			
TITLE	MICRO USB 5PF B TYPE 沉板 板上 H 1.42 IPX7		
DWN	Jack Lu 06/11/18	PART NO.	2UB-5B-WP11-x-S382
CHKD	Jacky Chen 06/11/18	SCALE 1:1	UNIT: mm
APVD	Tony Kao 06/11/18	SIZE: A3	SHEET: 2 of 2
			REV: R3

CUSTOMER COPY

文件編號 RD-06-043-A