REV.	ECN NO OR DESCRIPTION	REVISED	DATE
A	PDR NO:T180516-3A	Chensong	2018.10.19

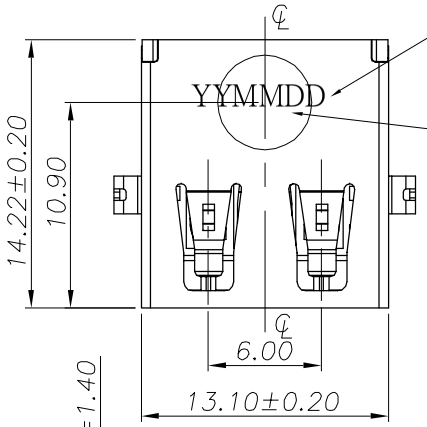

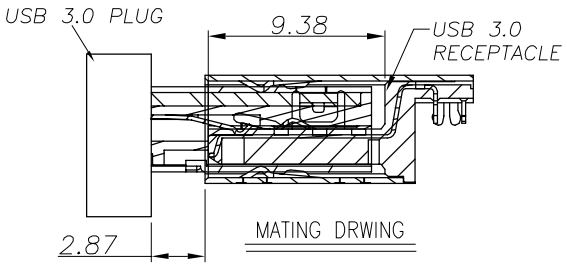

SPECIFICATIONS:

1. ELECTRICAL CHARACTERISTICS:
   1-1. RATING: 1.8A (PIN1,4) ; OTHER CONTACTS 0.25A
   1-2. CONTACT RESISTANCE: 30mΩ MAX.(INITIAL)
   1-3. DIELECTRIC WITHSTANDING VOLTAGE: 300V AC FOR ONE MINUTE.
   1-4. INSULATION RESISTANCE: 100MΩ MIN. MEASURED BY 300 VDC
2. MECHANICAL CHARACTERISTICS:
   2-1. INSERTION FORCE : 3.5 KGF MAX.
   2-2. WITHDRAWAL FORCE : 1.0~2.5Kgf MIN(INITIAL),
   0.8~2.5Kgf MIN(AFTER TESE)
3. LIFE TEST: 5,000 CYCLES MIN.
4. OTHER GENERAL SPEC. TO REFER "USB 3.0 SERIES SPEC".
5. TO CONFORM TO SINGATRON HAZARDOUS SUBSTANCE FREE SPEC.
6. HALOGEN PRODUCT IDENTIFICATION MARK ON JACK: ◎
7. HALOGEN PRODUCT IDENTIFICATION LABEL ON PACKAGING:
8. FOR REFLOW SOLDERING LEAD-FREE PROCESS.

PART NO.
2UB1646-002111F

- SUFFIX: HALOGEN FREE
- PACKAGE
  1: TAPE & REEL
- HOUSING & BASE COLOR
  1: BLACK
- CONTACT PLATING
  1: GOLD 30U" PLATING ON CONTACT AREA,
  MATTE TIN PLATING ON SOLDER AREA,

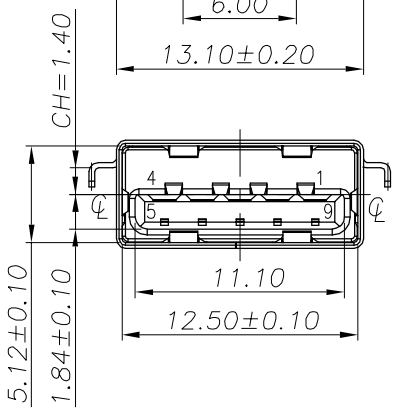

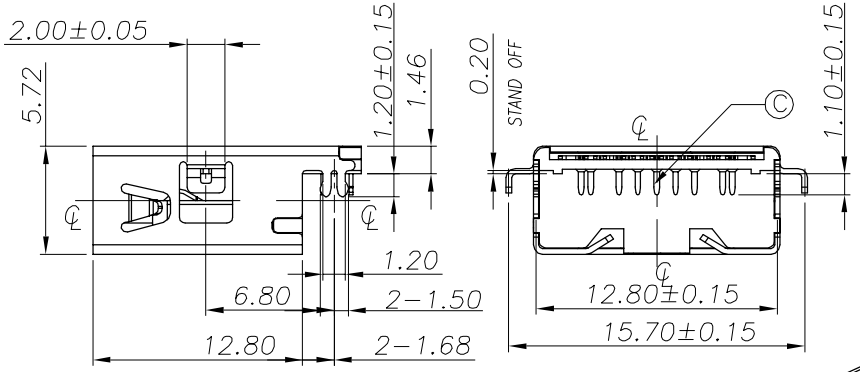

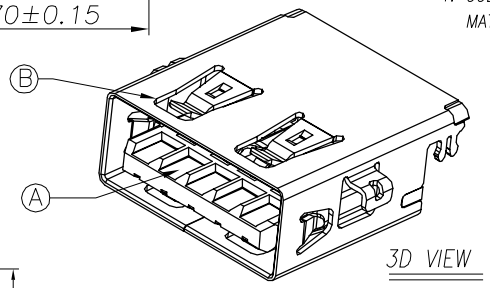

3D VIEW

Pin Number	Signal ASSIGNMENT
PIN 1	VBUS
PIN 2	D-
PIN 3	D+
PIN 4	GND
PIN 5	StdA_SSRX-
PIN 6	StdA_SSRX+
PIN 7	GND_DRAIN
PIN 8	StdA_SSTX-
PIN 9	StdA_SSTX+

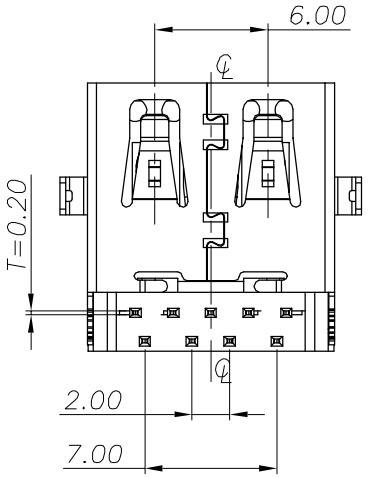

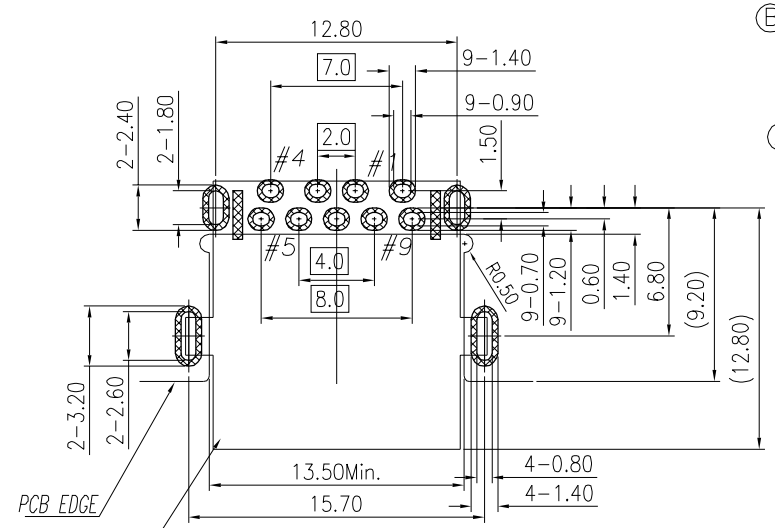

RECOMMENDED P.C.B LAYOUT (THK:0.8mm)
TOP VIEW (TOL:±0.05)

NO	DESCRIPTION	QTY	MATERIAL	PLATING & COLOR
D	INK			
C	TERMINAL	4	C5210-EH T=0.20	SEE PART NO.
B	SHELL	1	SUS201 T=0.30	NICKEL 60u"MIN
A	HOUSING	1	PA9T UL 94V-0	BLACK

UNLESS OTHERWISE SPECIFED TOLERANCES

DECIMALS: X :±0.5, X.X :±0.3, X.XX :±0.2

ANGLES: X :±1°, X.X :±0.5°

Singatron Enterprise Co., Ltd.
信音企業股份有限公司

TITLE	USB 3.0 CONNECTOR CH=-1.40mm		
DWN	Chensong	PART NO.2UB1646-002111F	
CHKD		SCALE 4:1	UNIT: mm
APVD		SIZE: A3	SHEET:1 OF 1 REV: A

CUSTOMER COPY

文件編號:RD-06-043-A