REV.	ECN NO OR DESCRIPTION	REVISED	DATE
A	PDR RELEASE	Even	2020.09.08
B	ECN NO: L202103-C05	Even	2021.08.17

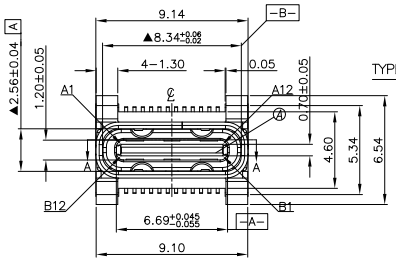

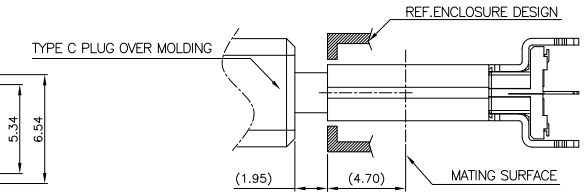

RECEPTACLE & PLUG MATED CONTITION

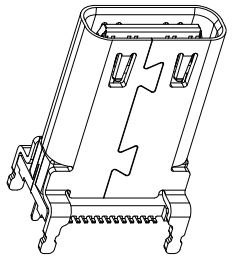

SPECIFICATIONS:

1. ELECTRICAL CHARACTERISTICS:
   1-1. CURRENT RATING: 5.0A
   1-2. VOLTAGE RATING: 20.0 V
   1-3. LLCR: VBUS& GND PINS: 40mΩ/PIN MAX
        OTHER PINS : 40mΩ/PIN MAX
        LLCR MAX. CHANGE OF ALL PINS: 10mΩ
   1-4. INSULATION RESISTANCE: 100MΩ MIN
2. MECHANICAL CHARACTERISTICS:
   2-1. INSERTION FORCE: 0.5~2.0kg.
   2-2. WITHDRAWAL FORCE: 1.4~2.0kg.(INTITIAL) 0.8~2.0kg.(AFTER LIFE TEST)
3. DURABILITY: 10,000 CYCLES.
4. TO CONFORM TO THE SINGATRON HAZARDOUS SUBSTANCE FREE SPEC.
5. HALOGEN FREE PRODUCT IDENTIFICATION LABEL ON PACKAGING:
6. PACKAGE: SEE "2UB1752-C00111F" PACKAGE.
7. FOR REFLOW SOLDERING LEAD-FREE PROCESS.
8. OTHER GENERAL SPEC. TO REFER "2UB1752-C00111F SPEC".

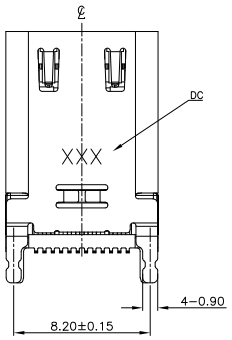

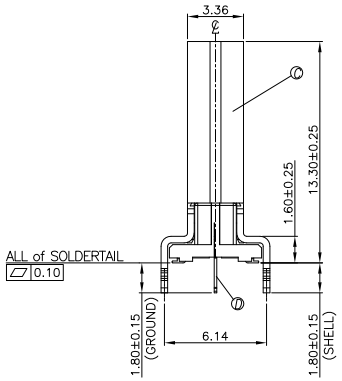

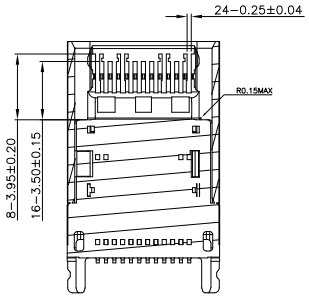

SECTION A−A

PART NO. 2UB1752-C00111F

- SUFFIX: HALOGEN FREE
- PACKAGE
  1: TAPE & REEL
- HOUSING COLOR
  1: BLACK
- CONTACT PLATING
  1: 30u"Au PIATING ON MATING AREA,
  GOLD FLASH ON SOLDERING AREA,
  50u" Min. NICKEL UNDER PLATING OVERALL

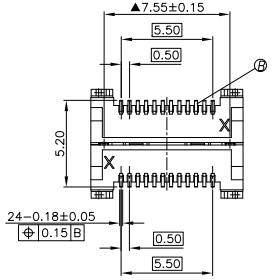

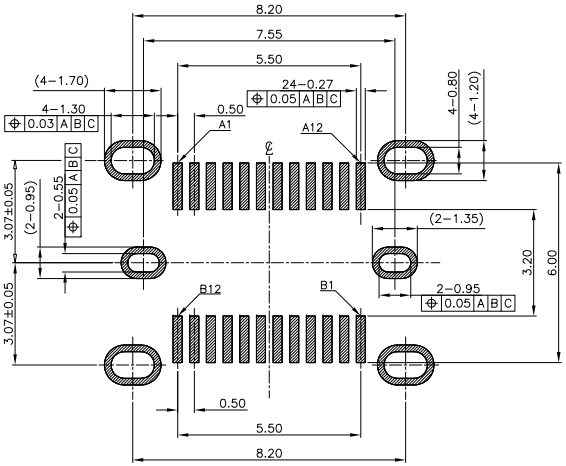

RECOMMENDED PCBLAYOUT

TOP VIEW
SCALE 2:1
(TOLERANCE=±0.05mm)

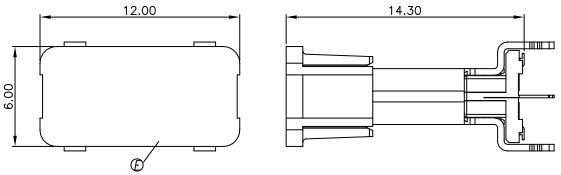

WITH CAP CONDITION

NO	DESCRIPTION	QTY	MATERIAL	PLATING & COLOR
E	CAP	1	LCP UL 94V-0	BLACK
D	SIGNAL	1	SUS 301	
C	SHELL	1	SUS 304	50u"MIN. NICKEL
B	CONTACT	24	C19400-H	SEE"PART NO.'
A	HOUSING	1	PA9T UL 94V-0	BLACK

UNLESS OTHERWISE SPECIFED TOLERANCES

DECIMALS: X :±0.5, X.X :±0.3, X.XX :±0.2

ANGLES: X :±2°, X.X :±1°

信音科技(香港)有限公司

TITLE	USB TYPE C VERTICAL(C2)		
DWN	EVEN 2021.08.17	PART NO. 2UB1752-C00111F	
CHKD		SCALE 4:1	UNIT: mm
APVD	ANGELA2021.08.17	SIZE: A3	SHEET:1 OF 1	REV: B

CUSTOMER COPY

文件編號: 7F-02-R013-A