REV.	ECN NO OR DESCRIPTION	REVISED	DATE
A	PDR RELEASE	EVEN	2021.09.22

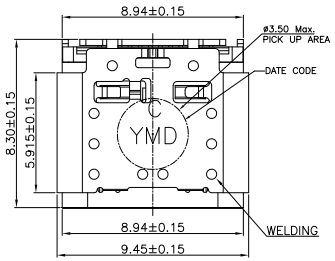

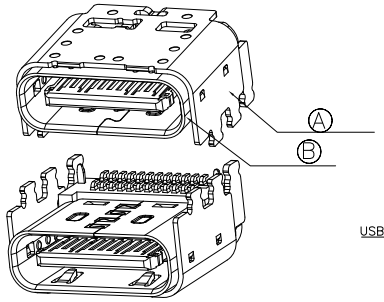

3D VIEW

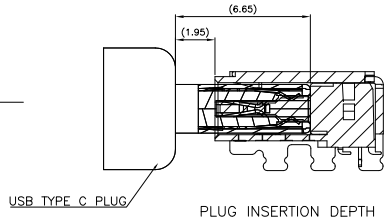

PLUG INSERTION DEPTH

SPECIFICATIONS:

1. ELECTRICAL CHARACTERISTICS:
   1-1. CURRENT RATING: 5.0A
   1-2. VOLTAGE RATING: 20.0 V
   1-3. LLCR: VBUS& GND PINS: 40mΩ/PIN MAX
        OTHER PINS : 40mΩ/PIN MAX
        LLCR MAX. CHANGE OF ALL PINS: 10mΩ
   1-4. INSULATION RESISTANCE: 100MΩ MIN
2. MECHANICAL CHARACTERISTICS:
   2-1. INSERTION FORCE: 0.5~2.0kg.
   2-2. WITHDRAWAL FORCE: 1.4~2.0kg.(INTITIAL) 0.8~2.0kg.(AFTER LIFE TEST)
3. DURABILITY: 10,000 CYCLES.
4. TO CONFORM TO THE SINGATRON HAZARDOUS SUBSTANCE FREE SPEC.
5. HALOGEN FREE PRODUCT IDENTIFICATION LABEL ON PACKAGING:
6. PACKAGE: SEE "2UB1811-C00111F" PACKAGE.
7. FOR REFLOW SOLDERING LEAD-FREE PROCESS.
8. OTHER GENERAL SPEC. TO REFER "2UB1811-C00111F SPEC".

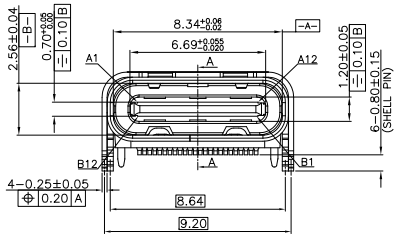

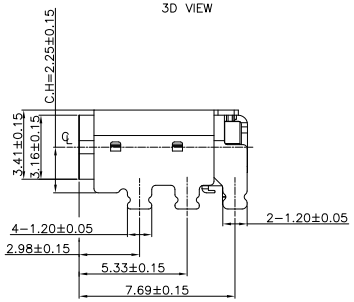

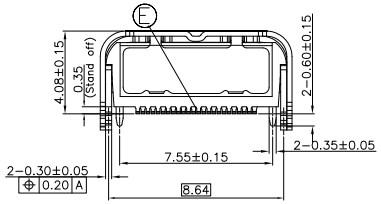

PART NO.
2UB1811-C00111F

- SUFFIX: HALOGEN FREE
- PACKAGE
  1: TAPE & REEL
- HOUSING COLOR
  1: BLACK
- CONTACT PLATING
  1: 30u" Au ON MATING AREA,
  GOLD FLASH ON SOLDERING AREA,
  50u" MIN. NICKEL UNDER PLATING OVERALL

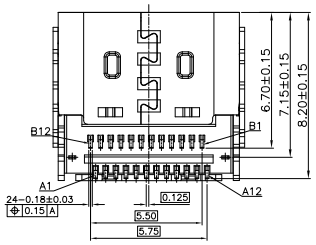

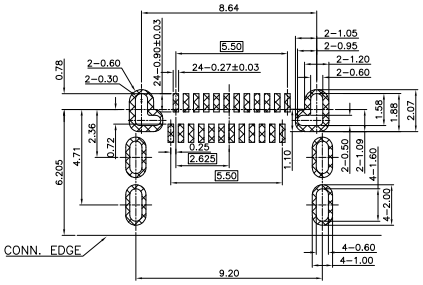

RECOMMENDED PCB LAYOUT(TOP VIEW)
(TOLERANCE=±0.05mm)

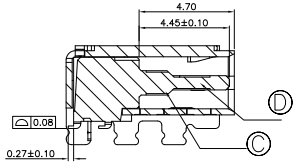

SECTION A-A

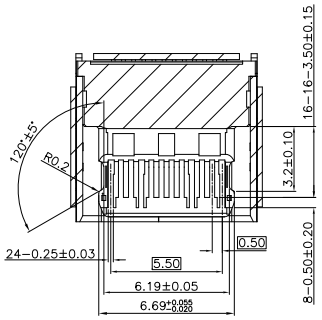

SECTION B-B

USB TYPE-C PIN ASSIGNMENTS:

A12	GND	B1	GND
A11	SSRXp2	B2	SSTXp2
A10	SSRXn2	B3	SSTXn2
A9	VBUS	B4	VBUS
A8	SBU1	B5	CC2
A7	Dn1	B6	Dp2
A6	Dp1	B7	Dn2
A5	CC1	B8	SBU2
A4	VBUS	B9	VBUS
A3	SSTXn1	B10	SSRXn1
A2	SSTXp1	B11	SSRXp1
A1	GND	B12	GND
PIN	SIGNAL NAME	PIN	SIGNAL NAME

NO	DESCRIPTION	QTY	MATERIAL	PLATING & COLOR
E	TERMINAL	24	C19400	SEE PART NO.
D	SIGNAL	1	SUS301	50u"MIN.NICKEL
C	HOUSING	1	PA9T UL 94V-0	BLACK
B	INNER SHELL	1	SUS304	50u"MIN.NICKEL
A	OUTSIDE SHELL	1	SUS301	50u"MIN.NICKEL

UNLESS OTHERWISE SPECIFIED TOLERANCES

DECIMALS: X :±0.5, X.X :±0.3, X.XX :±0.2

ANGLES: X :±2°, X.X :±1°

信音科技(香港)有限公司

TITLE	USB TYPE C , DUAL SMT(CH=2.25mm) C2		
DWN	EVEN 2021.09.22	PART NO. 2UB1811-C00111F	
CHKD		SCALE 1:1	UNIT: mm
APVD	ANGELA2021.09.22	SIZE: A3	SHEET:1 OF 1 REV: A

CUSTOMER COPY

文件編號 :7F-02-R013-A