| REV. | ECN NO OR DESCRIPTION | REVISED | DATE |
|---|---|---|---|
| A | PDR RELEASE | EVEN | 2023.03.25 |
| B | ECN NO: L202306-C01 | EVEN | 2023.07.12 |

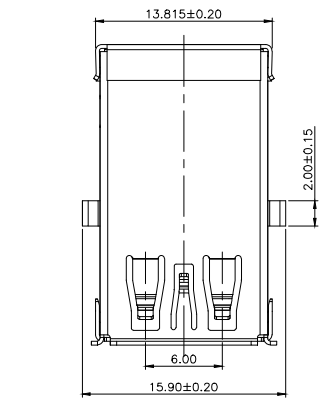


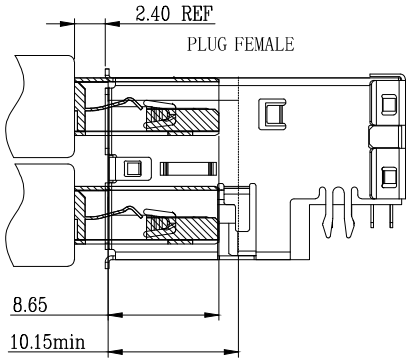


SPECIFICATIONS:
1. Rating Voltage : 30V AC.
2. Rating Current: 1.8A (VBUS&GND) ; OTHER CONTACTS 0.25A
3. Contact Resistance:30 mΩ MAX.
4. Insulation Resistance:100 MΩ MIN.
5. Withstanding Voltage:AC 500V.
6. Mating force: 35N MAX
7. Extraction force: 10N~35N
8. Life test:5000Cycles MIN.
9. Temperature Range: -55°C+85°C.

3. TO CONFORM TO THE SINGATRON HAZARDOUS SUBSTANCE FREE SPEC.
4. HALOGEN FREE PRODUCT IDENTIFICATION LABEL ON PACKAGING:
5. PACKAGE: SEE "2UB1849-000111F" PACKAGE.
6. FOR REFLOW SOLDERING LEAD-FREE PROCESS.
7. OTHER GENERAL SPEC. TO REFER "2UB1849-000111F SPEC".

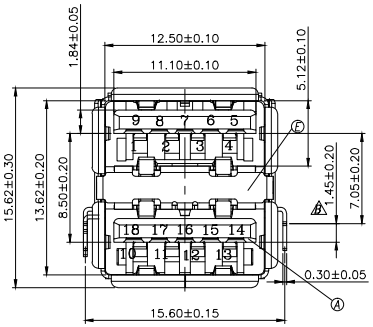


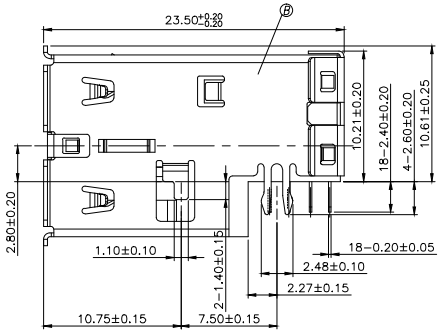


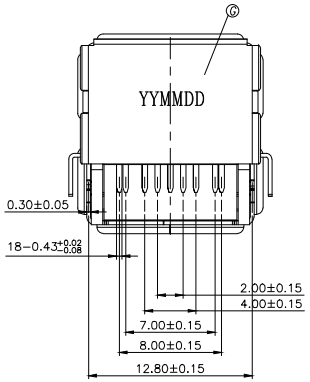


PART NO.
2UB1849-000111F
- SUFFIX: HALOGEN FREE
- PACKAGE
  1: TAPE &REEL
- HOUSING
  1: BLACK
- CONTACT PLATING
  1: 30u" GOLD PLATING ON CONTACT AREA, MATTE Sn 100u"MIN. ON SOLDERING AREA, 50u" MIN. NICKEL UNDER PLATING OVERALL

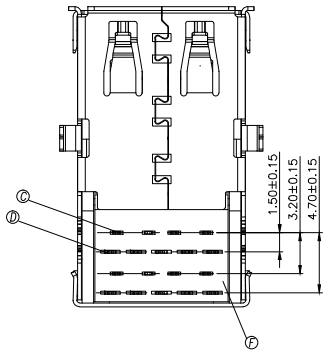


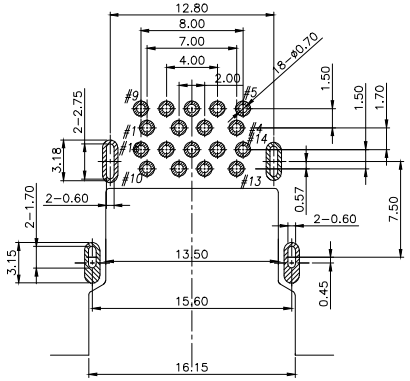


RECOMMENDED P.C.B. LAYOUT
TOLERANCE (TOP VIEW) ±0.05mm

| NO | DESCRIPTION | QTY | MATERIAL | PLATING & COLOR |
|---|---|---|---|---|
| G | REAR SHELL | 1 | SUS201 | |
| F | COVER | 1 | LCP UL 94V-0 | BLACK |
| E | MIDDLE | 1 | SUS201 | |
| D | 3.0 CONTACT | 10 | C2680 | SEE PART NO. |
| C | 2.0 CONTACT | 8 | C5191 | SEE PART NO. |
| B | FRONT SHELL | 1 | SUS201 | 60u" MIN. NICKEL |
| A | HOUSING | 1 | PA9T UL 94V-0 | BLACK |

UNLESS OTHERWISE SPECIFIED TOLERANCES

DECIMALS: X :±0.5, X.X :±0.3, X.XX :±0.2
ANGLES: X :±2°, X.X :±1°

信音科技(香港)有限公司

| | | | |
|---|---|---|---|
| TITLE | DOUBLE LAYER USB3.1 DIP TYPE | | |
| DWN | EVEN 2023.07.12 | PART NO. 2UB1849-000111F | |
| CHKD | | SCALE N/A | UNIT: mm |
| APVD | TERESA2023.07.12 | SIZE: A3 | SHEET:1 OF 1 REV:B |

CUSTOMER COPY

文件編號: 7F-02-R013-A