REV.	ECN NO OR DESCRIPTION	REVISED	DATE
A	PRODUCT RELEASE	Ares	2012.06.18
B	ECR NO.: C140247	Zhibin	2014.10.09

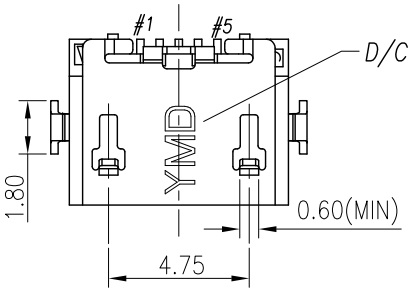

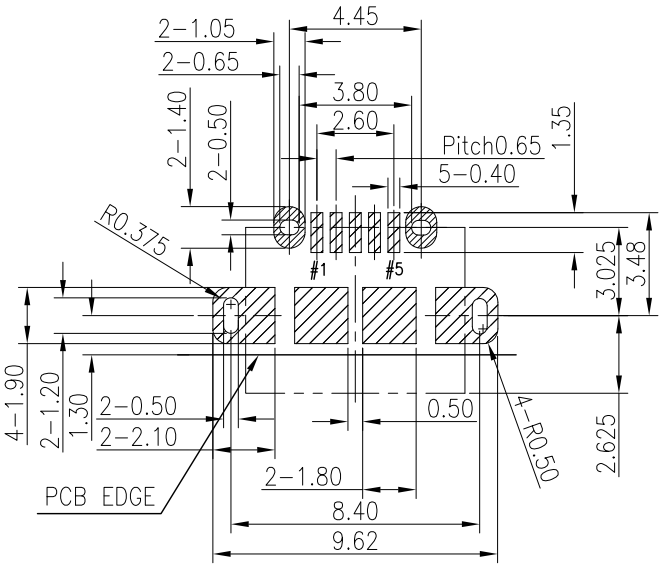

RECOMMENDED PCB LAYOUT

TOP VIEW, TOL ±0.05

SPECIFICATIONS:

1. ELECTRICAL CHARACTERISTICS:
   1-1. RATING: 1.8A (PIN1/5), 0.5A (PIN2/3/4)
   1-2. CONTACT RESISTANCE: 30mΩ MAX.(INITIAL) 40mΩ MAX.(FINAL)
   1-3. DIELECTRIC WITHSTANDING VOLTAGE: 500V AC FOR ONE MINUTE.
   1-4. INSULATION RESISTANCE: 100M MIN. MEASURED BY 500 VDC
2. MECHANICAL CHARACTERISTICS:
   2-1. INSERTION FORCE : 3.6 KGF (MAX)
   2-2. WITHDRAWAL FORCE : 0.8 KGF(Reference)
3. LIFE TEST: 10,000 CYCLES .
4. TO CONFORM TO THE SINGATRON HSF SPEC.
5. HALOGEN FREE PRODUCT IDENTIFICATION MARK ON PRODUCT:
6. HALOGEN FREE PRODUCT IDENTIFICATION LABEL ON PACKAGING:
7. FOR REFLOW SOLDERING LEAD-FREE PROCESS.
8. SOLDER HEAT RESISTANCE REFLOW SOLDERING 260°C 10SECS.
9. PLUG INTERFACE DIMENSIONS COMFORM TO USB2.0 SPEC.
10. PACKAGING: TAPE & REEL.

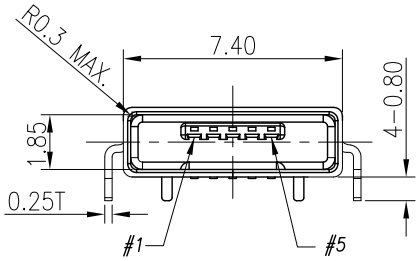

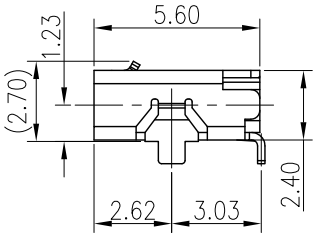

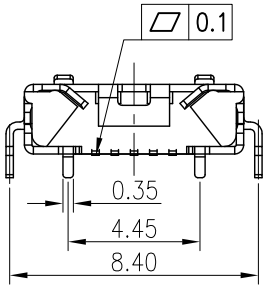

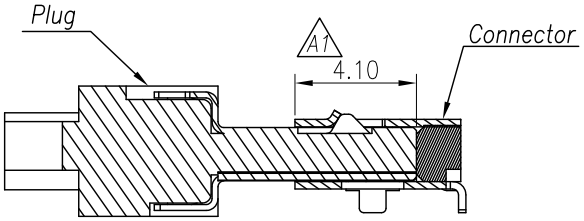

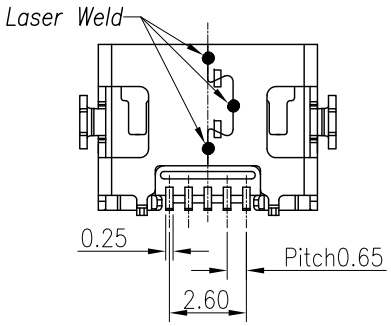

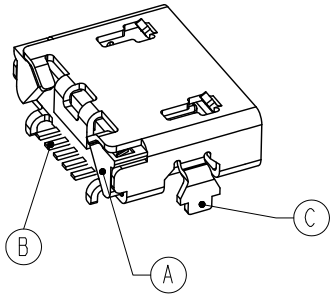

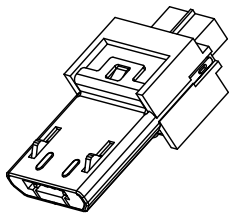

Plug

NO	DESCRIPTION	QTY	MATERIAL	PLATING & COLOR
C	SHELL	1	STAINLESS STEEL 0.25T	MATTE TIN
B	CONTACT	5	COPPER ALLOY 0.15T	30u" Au ON CONTACT AREA GOLD FLASH ON SOLDER AREA
A	HOUSING	1	HI-TEMP. THERMO-PLASTIC UL94V-0	GRAY

UNLESS OTHERWISE SPECIFED TOLERANCES

DECIMALS: X :±0.5, X.X :±0.3, X.XX :±0.2

ANGLES: X :±2°, X.X :±1°

Singatron Enterprise Co., Ltd.
信音企業股份有限公司

TITLE	MICRO USB AB TYPE RECEPTACLE		
DWN	WZB 14/10/14	PART NO. 2UB2120-000111F	
CHKD	HQC 14/10/14	SCALE 5:1	UNIT: mm
APVD	ZJZ 14/10/14	SIZE: A3	SHEET:1 OF 1 REV:B

CUSTOMER COPY

文件編號 RD-06-043-A