REV.	ECN NO OR DESCRIPTION	REVISED	DATE
B	ECN: C130136 MODIFY MATERIAL	ZJK	2013.07.03
C	ECN NO: C140047 MODIFY dimension	REX	2014.04.29
D	ECN NO: C140093 MDODIFY PLATING	ZLS	2014.5.12

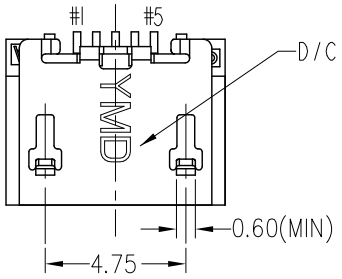

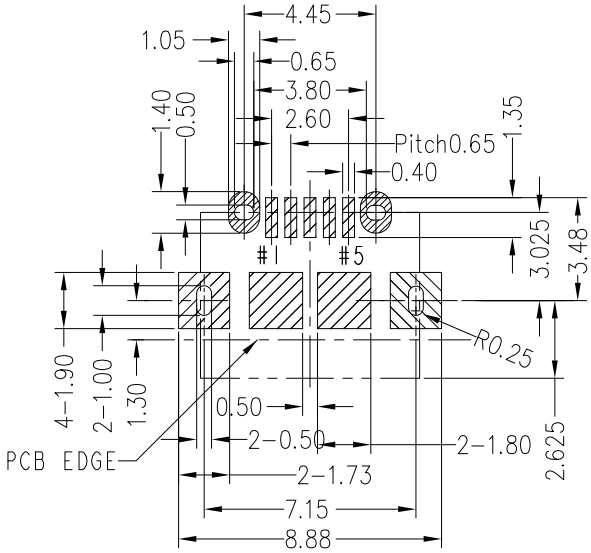

RECOMMENDED PCB LAYOUT

TOP VIEW, TOL ±0.05

SPECIFICATIONS:

1. ELECTRICAL CHARACTERISTICS:
   1-1. RATING: 2A (PIN1/5), 0.5A (PIN2/3/4)
   1-2. CONTACT RESISTANCE: 30mΩ MAX.(INITIAL) 40mΩ MAX.(FINAL)
   1-3. DIELECTRIC WITHSTANDING VOLTAGE: 500V AC FOR ONE MINUTE.
   1-4. INSULATION RESISTANCE: 100M MIN. MEASURED BY 500 VDC
2. MECHANICAL CHARACTERISTICS:
   2-1. INSERTION FORCE : 3.6 KGF (MAX)
   2-2. WITHDRAWAL FORCE : 0.8 KGF(REF)
3. LIFE TEST: 5,000 CYCLES .
4. TO CONFORM TO THE SINGATRON HSF SPEC.
5. HALOGEN FREE PRODUCT IDENTIFICATION MARK ON PRODUCT:
6. HALOGEN FREE PRODUCT IDENTIFICATION LABEL ON PACKAGING:
7. FOR REFLOW SOLDERING LEAD-FREE PROCESS.
8. SOLDER HEAT RESISTANCE REFLOW SOLDERING 260°C 10SECS.
9. PLUG INTERFACE DIMENSIONS COMFORM TO USB2.0 SPEC.
10. PACKAGING: TAPE & REEL.

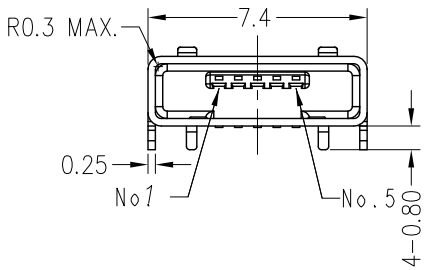

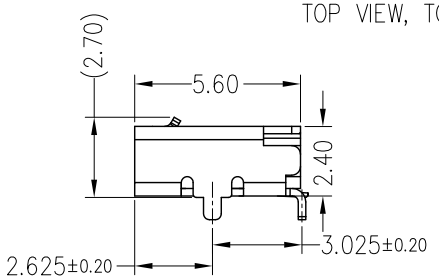

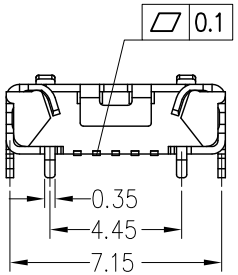

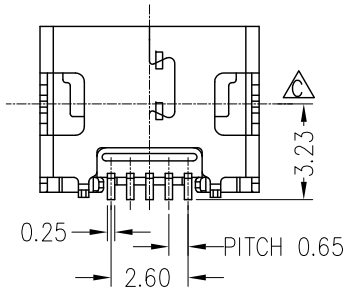

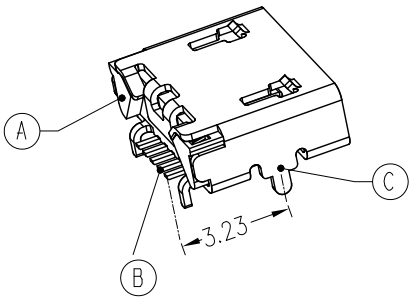

NO	DESCRIPTION	QTY	MATERIAL	PLATING & COLOR
C	SHELL	1	STAINLESS STEEL 0.25T	NICKEL PLATED ALL OVER
B	CONTACT	5	COPPER ALLOY 0.15T	GOLD FLASH ON SOLDER AREA AND CONTACE AREA ALL OVER NI PLATING
A	HOUSING	1	PA-10T+30%GF (無鹵)	BLACK

UNLESS OTHERWISE SPECIFED TOLERANCES

DECIMALS: X :±0.5, X.X :±0.3, X.XX :±0.2

ANGLES: X :±2°, X.X :±1°

Singatron Enterprise Co., Ltd.
信音企業股份有限公司

TITLE	MICRO USB AB TYPE RECEPTACLE		
DWN	ZLS 14/5/19	PART NO. 2UB2120-001111F	
CHKD	ZJZ 14/5/19	SCALE 5:1	UNIT: mm
APVD	Liao 14/5/19	SIZE: A3	SHEET: 1 OF 1 REV:D

CUSTOMER COPY

文件編號RD-06-043-A