REV.	ECN NO OR DESCRIPTION	REVISED	DATE
A	PRODUCT RELEASE	Ye wei	2021.12.21

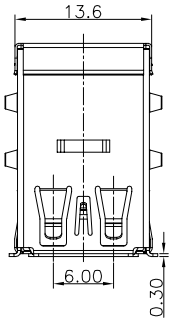

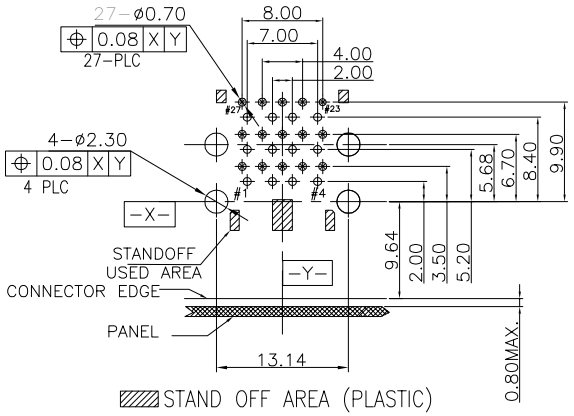

STAND OFF AREA (PLASTIC)

RECOMMENDED P.C.B LAYOUT(TOP VIEW)

THICKNESS=1.60mm,TOLERANCE:±0.05

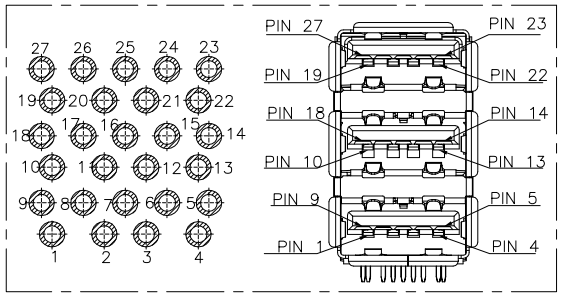

PIN NO.

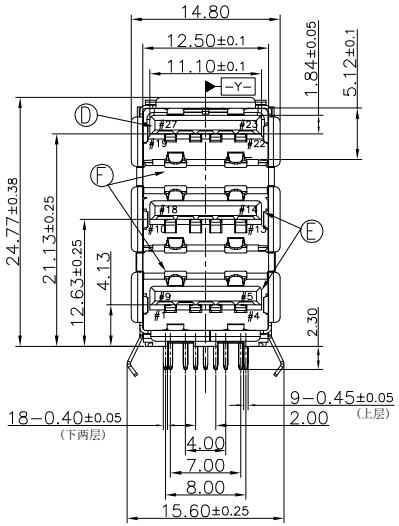

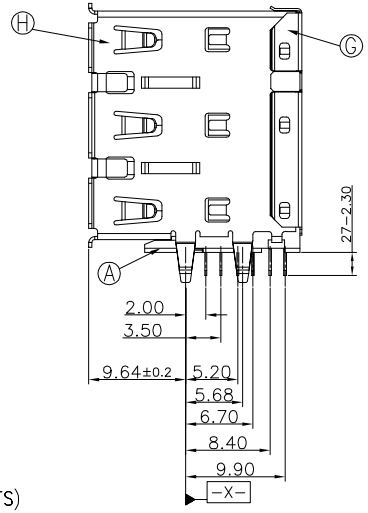

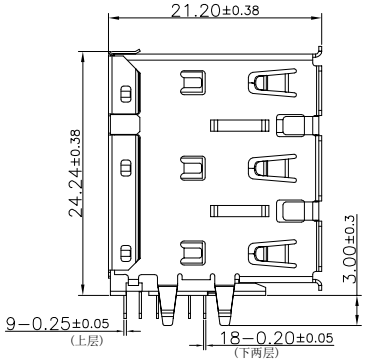

PIN NO.:

REMARK	第一層	第二層	第三層	SIGNAL NAME
USB2 CONTACT PIN	1	10	19	VBUS
	2	11	20	D-
	3	12	21	D+
	4	13	22	GND
USB3 CONTACT PIN	5	14	23	SSRX-
	6	15	24	SSRX+
	7	16	25	GND_DRAIN
	8	17	26	SSTX-
	9	18	27	SSTX+

SPECIFICATIONS:

1.ELECTRICAL CHARACTERISTICS:
- 1-1. CURRENT RATING: 1.8A (VBUS&GND), 0.25A (OTHER CONTACTS)
- 1-2. CONTACT RESISTANCE: 30mΩ(INITIAL), 40mΩ(AFTER LIFE TEST)
- 1-3. DIELECTRIC WITHSTANDING VOLTAGE: 500V AC FOR ONE MINUTE.
- 1-4. INSULATION RESISTANCE: 1,00MΩ MIN. AT 500V DC

2. MECHANICAL CHARACTERISTICS:
- 2-1. INSERTION FORCE: 35N MAXIMUM.
- 2-2. WITHDRAWAL FORCE: 10N MIN.(INTAIL),8N MIN. AFTER LIFE TEST.
- 2-3. LIFE TEST: 5,000 CYCLES MIN.

3. ENVIRONMENTAL CHARACTERISTICS:
- 3-1. OPERATING TEMPERATURE: -30°~+80°C

4. FOR IR REFLOW ROFILE,PEAK TEMPERATURE:260°C MAX.10SECS.
5. PACKAGING: TRAY.(60pcs/TARY. 10TARY./CARTON)
6. HALOGEN FREE PRODUCT IDENTIFICATION MARK :Ⓖ
7. HALOGEN FREE PRODUCT IDENTIFICATION LABEL ON PACKAGING:
8. TO CONFORM TO SINGATRON HAZARDOUS SUBSTANCE FREE SPEC.

NO	DESCRIPTION	QTY	MATERIAL	PLATING & COLOR
H	FROMT SHELL	1	STAINLESS STEEL	TIN ON SOLDER TAIL ALL OVER NICKEL PLATING
G	REAR SHELL	1	STAINLESS STEEL	CLEAN
F	FINGER	2	STAINLESS STEEL	CLEAN
E	2- HSG	1	PA9T UL94V-0	BLACK COLOR
D	1- HSG	1	PA9T UL94V-0	BLACK COLOR
C	USB3 CONTACT	15	COPPER ALLOY	G/F ON CONTACT AREA MATTE TIN 80u"MIN. ON SOLDER TAIL NICKEL 50u" MIN. UNDER PLATED
B	USB2 CONTACT	12	COPPER ALLOY	
A	BACK COVER 1	1	LCP UL94V-0	BLACK COLOR

UNLESS OTHERWISE SPECIFIED TOLERANCES

DECIMALS: X :±0.5, X.X :±0.3, X.XX :±0.2

ANGLES: X :±2°, X.X :±1°

Singatron Enterprise Co., Ltd.
信音企業股份有限公司

TITLE	三层USB3.0			
DWN	Ye wei	PART NO.2UB2Y11-303111F		
CHKD	jim-deng	SCALE 1:1	UNIT: mm	
APVD	jim-deng	SIZE: A3	SHEET: 10F1	REV: A

CUSTOMER COPY

文件編號:RD-06-043-A