REV.	ECN NO OR DESCRIPTION	REVISED	DATE
A	NEW RELEASE	ZW	11/15'13

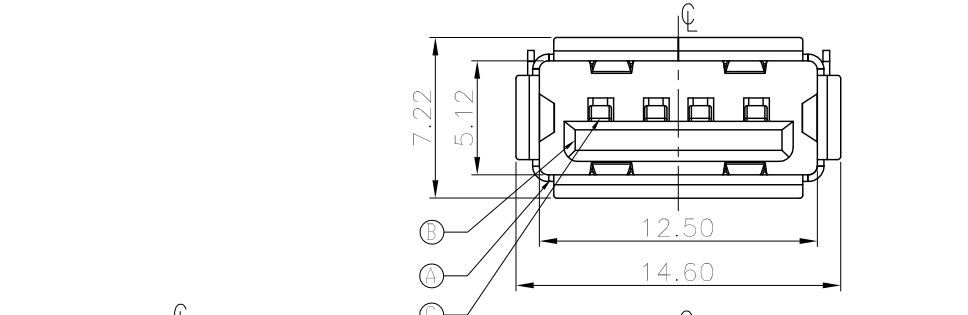

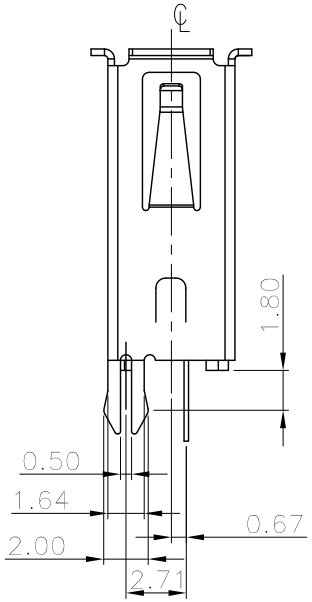

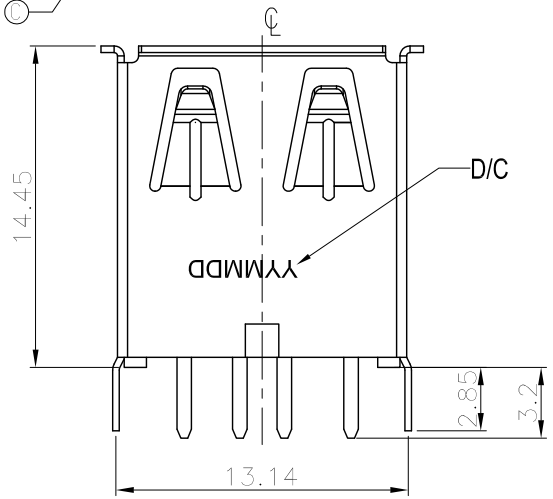

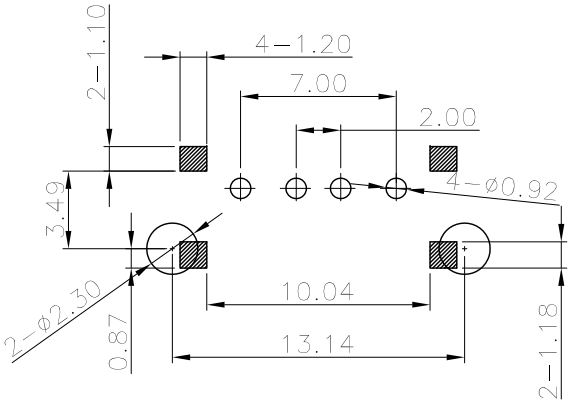

RECOMMENDED PCB LAYOUT

(TOL:±0.05)

SPECIFICATION

1. ELECTRICAL CHARACTERISTICS:
   - 1-1. VOLTAGE&CURRENT RATING:1.5A
   - 1-2. CONTACT RESISTANCE: 30mΩ MAX INITIAL.
   - 1-3. INSULATION RESISTANCE: 1000MΩ MIN AT VOLTAGE 500V 60 SECOND.
   - 1-4. DIELECTRIC WITHSTAND: 500V AC for 1 MINUTE
   - 1-5. OPERATING TEMPERATURE: -55°C~+85°C
2. MECHANICAL CHARACTERISTICS:
   - 2-1. INSERT FORCE: 35N (3.5Kgf) Max
   - 2-2. WITHDRAW FORCE: 10N(1.0Kgf) Min
3. OTHER GENERAL SPEC TO REFER "2UB2Y69 SERIES SPEC"
4. GREEN PRODUCT IDENTIFICATION LABEL ON PACKAGING: **G.P. PASS**
5. PRODUCT NO:

2UB2Y69-2 3 0 2 2 2 H

- USB TYPE: 2=USB 2.0
- CONTACT PLATING: 30=30U"PdNi+GOLD FLASH
- SHELL TYPE: 2=WITHOUT BACK SHELL
- HOUSING MATERIAL: 2=THERMOPLASTIC UL94-V0
- PACKAGE TYPE: 2=SOFT TRAY
- HALOGEN CODE: H=LEAD FREE

NO	DESCRIPTION	QTY	MATERIAL	PLATING & COLOR
C	CONTACT	4	COPPER ALLOY 0.20T	30U"PdNi+G/F PLATED ON CONTACT AREA, TIN ON TAIL AND NI UNDERPLATED
B	SHELL	1	STEEL 0.30T	NI PLATED OVERALL
A	HOUSING	1	THERMOPLASTIC UL94-V0	BLACK

UNLESS OTHERWISE SPECIFED TOLERANCES

DECIMALS: X :±0.5, X.X :±0.3, X.XX :±0.2

ANGLES: X :±2°, X.X :±1°

Singatron Enterprise Co., Ltd.
信音企業股份有限公司

TITLE	USB A TYPE RECEPTACLE		
DWN	ZW	PART NO.	2UB2Y69-230222H
CHKD	KIM	SCALE N/A	UNIT: mm
APVD	SEAN	SIZE: A3	SHEET: 1OF1 REV: A

CUSTOMER COPY

文件編號 RD-08-044-A