REV.	ECN NO OR DESCRIPTION	REVISED	DATE
A	PDR NO: T121011-3A	EDI-ZHOU	2013.3.20

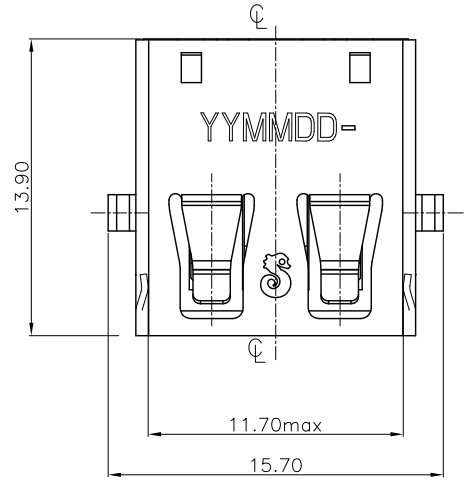

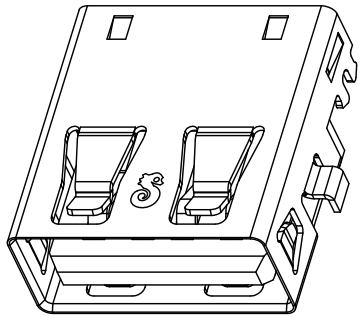

3D REVIEW

SPECIFICATIONS:

1. ELECTRICAL CHARACTERISTICS:
   1-1. CONTACT RESISTANCE: 30mΩ MAX.(INITIAL)
   AFTER LIFE TEST 50mΩ.
   1-2. DIELECTRIC WITHSTANDING VOLTAGE: 500V AC FOR ONE MINUTE.
   1-3. INSULATION RESISTANCE: 100MΩ MIN. MEASURED BY 500 VDC.
2. MECHANICAL CHARACTERISTICS:
   2-1. INSERTION FORCE : 3.5 KGF Max.
   2-2. WITHDRAWAL FORCE :0.5~3.5 KGF.
3. LIFE TEST: 5,000 CYCLES.
4. TO CONFORM TO SINGATRON HAZARDOUS SUBSTANCE FREE SPEC.
5. HALOGEN FREE PRODUCT IDENTIFICATION MARK ON JACK:
6. HALOGEN FREE PRODUCT IDENTIFICATION LABEL ON PACKAGING:
7. FOR REFLOW SOLDERING LEAD-FREE PROCESS.
8. PRINTED DATE CODE" YYMMDD- " ON TOP OF CONNECTOR.
   - DD: DAY
   - MM: MONTH
   - YY: YEAR

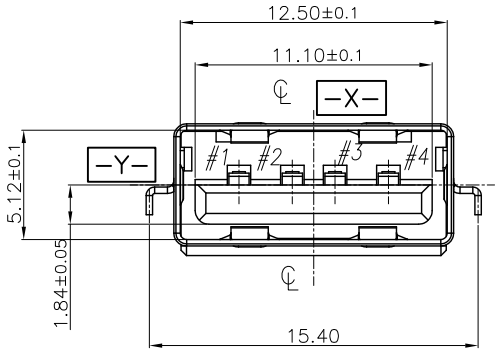

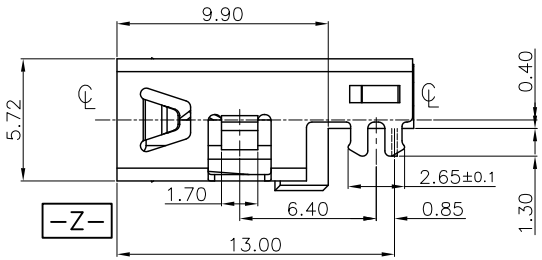

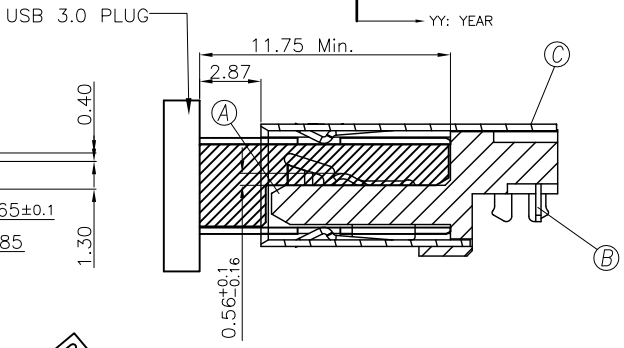

MATED SECTION

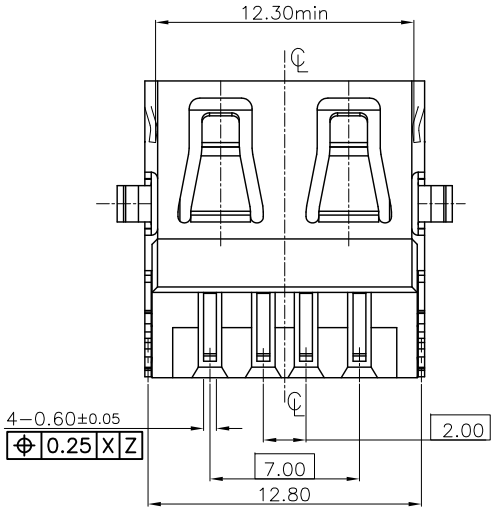

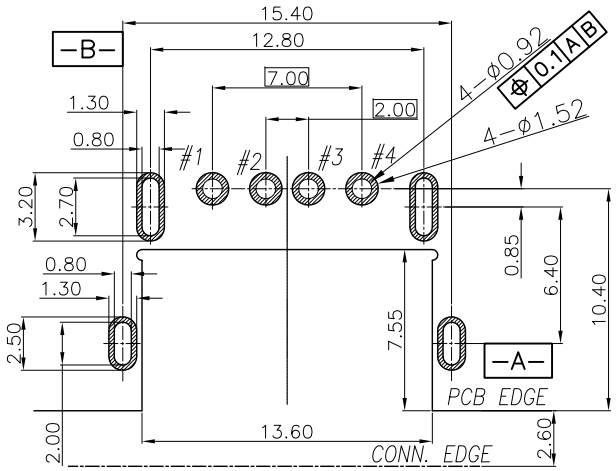

Recommended P.C.B Layout(THK:1.0mm)

TOLERANCE= ±0.05

REMARK	Pin Number	Signal ASSIGNMENT
USB2.0 CONTACT PIN	PIN 1	VBUS
	PIN 2	D-
	PIN 3	D+
	PIN 4	GND

NO	DESCRIPTION	QTY	MATERIAL	PLATING & COLOR
C	SHELL	1	STAINLESS STEEL,T=0.30	NICKEL 60u"MIN
B	4 PIN TERMINAL	4	COPPER ALLOY, T=0.25	Au 30u" Min ON CONTACT AREA Sn 100u" ON SOLDER AREA ALL OVER Ni 60u"
A	HOUSING	1	HIGH TEMP.THERMOPLASTIC	BLACK

UNLESS OTHERWISE SPECIFED TOLERANCES

DECIMALS: X :±0.5, X.X :±0.3, X.XX :±0.2

ANGLES: X :±2°, X.X :±1°

Singatron Enterprise Co., Ltd.
信音企業股份有限公司

TITLE	USB 2.0		
DWN	EDI.ZHOU2013.03.20	PART NO:2UB3604-004111F	
CHKD	BOYE 2013.03.20	SCALE:4:1	UNIT: mm
APVD	QUAN 2013.03.20	SIZE: A3	SHEET:1 OF 1

REV: A

CUSTOMER COPY

文件編號: RD-06-043-A