| REV. | ECN NO OR DESCRIPTION | REVISED | DATE |
|---|---|---|---|
| A | PDR NO: T141222-1A | ALLEN | 2015.04.15 |

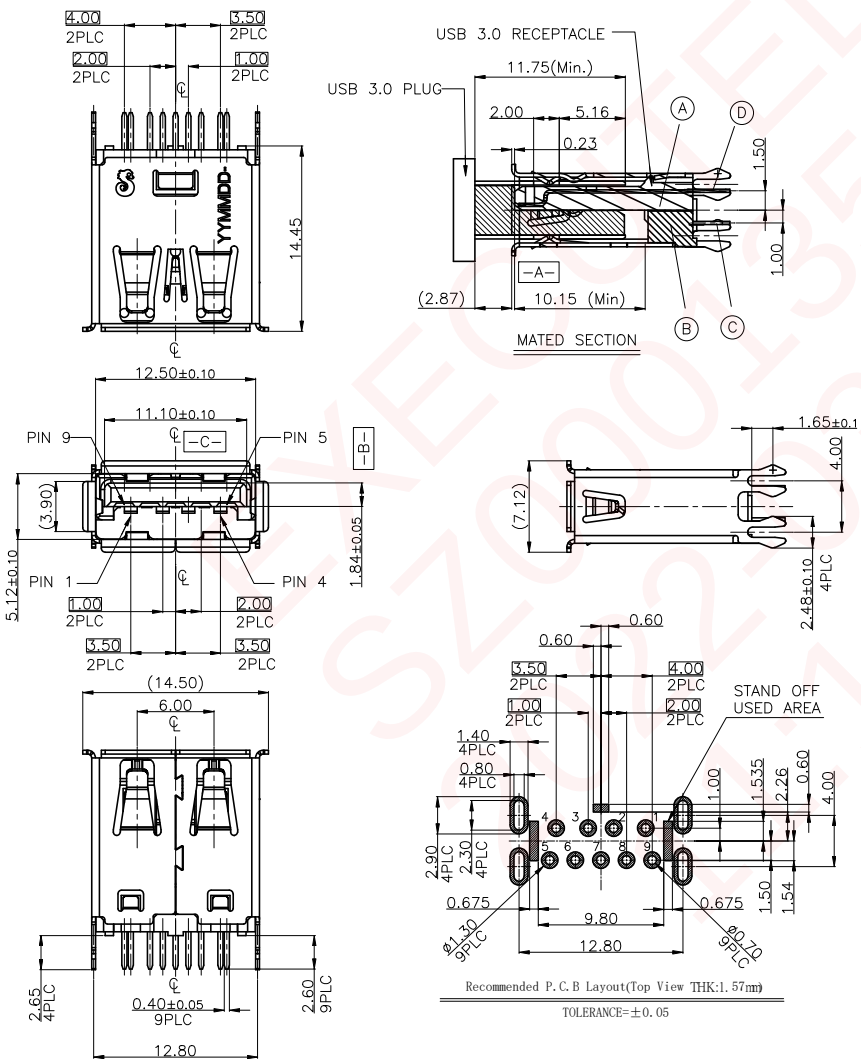


SPECIFICATIONS:

1. ELECTRICAL CHARACTERISTICS:
   1-1. CURRENT RATING: 1.8A (PIN1,4) ; OTHER CONTACTS 0.25A
   1-2. CONTACT RESISTANCE: 30mΩ MAX.
   1-3. DIELECTRIC WITHSTANDING VOLTAGE: 100V AC FOR 1 MINUTE
   1-4. INSULATION RESISTANCE: 100MΩ MIN .
2. MECHANICAL CHARACTERISTICS:
   2-1. INSERTION FORCE : 3.5 Kgf MAX.
   2-2. WITHDRAWAL FORCE : 1.0~2.5Kgf MAX.
   INITIAL : 1.0~2.5Kgf.
   TEST AFTER : 0.80~2.5Kgf.
3. DURABILITY: 5,000 CYCLES.
4. TO CONFORM TO SINGATRON HAZARDOUS SUBSTANCE FREE SPEC.
5. HALOGEN FREE PRODUCT IDENTIFICATION MARK ON JACK:
6. HALOGEN FREE PRODUCT IDENTIFICATION LABEL ON PACKAGING:
7. FOR REFLOW SOLDERING LEAD-FREE PROCESS.
8. DATE : YYMMDD-
9. PACKAGING : TRAY

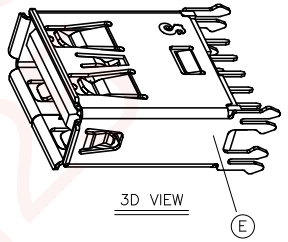


| Pin Number | Signal ASSIGNMENT |
|---|---|
| PIN 1 | VBUS |
| PIN 2 | D- |
| PIN 3 | D+ |
| PIN 4 | GND |
| PIN 5 | StdA_SSRX- |
| PIN 6 | StdA_SSRX+ |
| PIN 7 | GND_DRAIN |
| PIN 8 | StdA_SSTX- |
| PIN 9 | StdA_SSTX+ |

| NO | DESCRIPTION | QTY | MATERIAL | PLATING & COLOR |
|---|---|---|---|---|
| E | SHELL | 1 | STAINLESS STEEL,T=0.30 | NICKEL 60u"MIN |
| D | 5 PIN TERMINAL | 5 | BARSS,T=0.25 | Au 1uin PLATED ON CONTACT AREA; Matt. Sn 120uin PLATED ON SOLDERING ALL OVER 80uin NICKET PLATING. |
| C | 4 PIN TERMINAL | 4 | COPPER ALLOY, T=0.25 | |
| B | BASE | 1 | PA 9T UL94V-V0 | BLUE(300C) |
| A | BODY | 1 | PA 9T UL94V-V0 | BLUE(300C) |

UNLESS OTHERWISE SPECIFED TOLERANCES

Singatron Enterprise Co., Ltd.
信音企業股份有限公司

| DECIMALS: | ANGLES: |
|---|---|
| X :±0.5 | X :±2° |
| X.X :±0.3 | X.X :±1° |
| X.XX :±0.2 | |

| | | | | |
|---|---|---|---|---|
| TITLE | USB 3.0 CONNECTOR | | | |
| DWN | Allen | PART NO:2UB3903-029101F | | |
| CHKD | James | SCALE:4:1 | UNIT: mm | |
| APVD | Boye | SIZE: A3 | SHEET:1 OF 1 | REV:A |

CUSTOMER COPY

文件編號:-06-043-A