REV.	ECN NO OR DESCRIPTION	REVISED	DATE
A	PDR NO: T120301-5A	BOYE.QI	2012.07.03

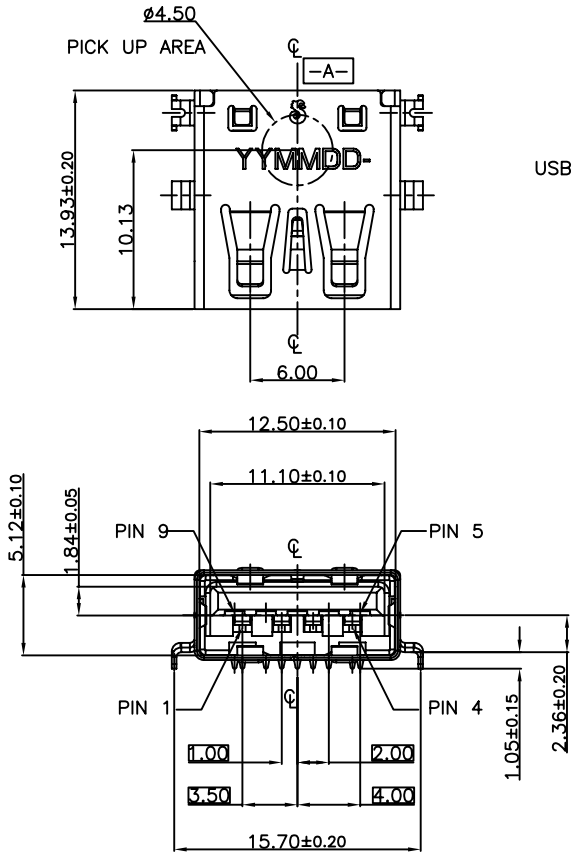

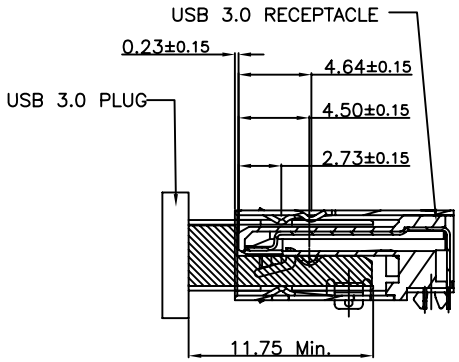

MATED SECTION

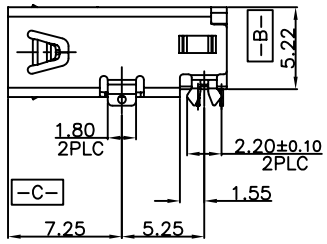

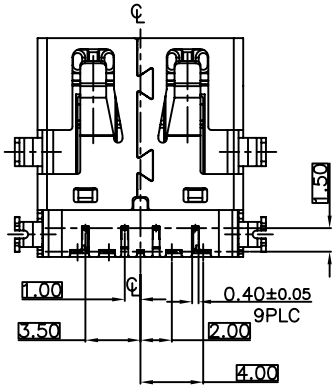

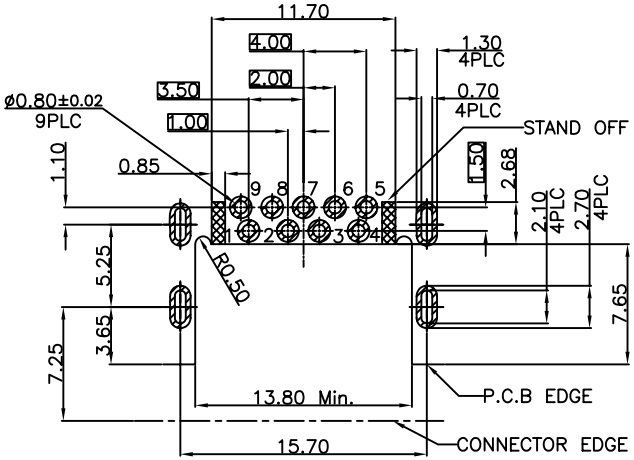

Recommended P.C.B Layout(TOP VIEW)

TOLERANCE=±0.05(THK:1.20mm)

SPECIFICATIONS:

1. ELECTRICAL CHARACTERISTICS:
   1-1. CURRENT RATING: 1.8A (PIN1,4) ; OTHER CONTACTS 0.25A
   1-2. CONTACT RESISTANCE: 30mΩ MAX INITIAL FOR PIN 1-4.
   50mΩ MAX INITIAL FOR OTHER PIN.
   1-3. DIELECTRIC WITHSTANDING VOLTAGE: 100V AC FOR 1 MINUTE
   1-4. INSULATION RESISTANCE: 100MΩ MIN .
2. MECHANICAL CHARACTERISTICS:
   2-1. INSERTION FORCE : 3.5 Kgf MAX.
   2-2. WITHDRAWAL FORCE : 3.5Kgf MAX.
   INITIAL : 1.0Kgf.
   TEST AFTER : 0.80Kgf.
3. DURABILITY: 5,000 CYCLES.
4. TO CONFORM TO SINGATRON HAZARDOUS SUBSTANCE FREE SPEC.
5. HALOGEN PRODUCT IDENTIFICATION MARK ON JACK:
6. HALOGEN PRODUCT IDENTIFICATION LABEL ON PACKAGING:
7. FOR WAVE SOLDERING LEAD-FREE PROCESS.
8. DATE : YYMMDD-
9. PACKAGING : TAPE & REEL

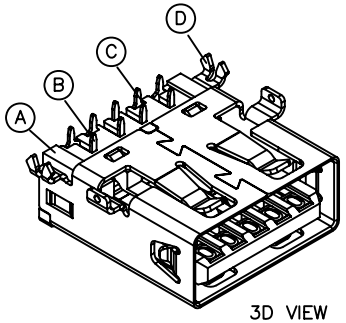

3D VIEW

REMARK	Pin Number	Signal ASSIGNMENT
USB2.0 CONTACT PIN	PIN 1	VBUS
	PIN 2	D-
	PIN 3	D+
	PIN 4	GND
USB3.0 CONTACT PIN	PIN 5	StdA_SSRX-
	PIN 6	StdA_SSRX+
	PIN 7	GND_DRAIN
	PIN 8	StdA_SSTX-
	PIN 9	StdA_SSTX+

NO	DESCRIPTION	QTY	MATERIAL	PLATING & COLOR
D	SHELL	1	STAINLESS STEEL,T=0.30	NICKEL 60u"MIN
C	5 PIN TERMINAL	5	BARSS,T=0.20	Au 2uin OVER 30uin Pd/Ni PLATED ON CONTACT AREA; Sn 120uin PLATED ON SOLDERING ALL OVER 80uin NICKET PLATING.
B	4 PIN TERMINAL	4	COPPER ALLOY, T=0.20	
A	BODY	1	HIGH TEMP.THERMOPLASTIC	BLUE(300C)

UNLESS OTHERWISE SPECIFED TOLERANCES

DECIMALS: X :±0.5, X.X :±0.3, X.XX :±0.2

ANGLES: X :±2°, X.X :±1°

Singatron Enterprise Co., Ltd.
信音企業股份有限公司

TITLE	USB 3.0 A TYPE FEMALE,R/A,SINKING,CH=2.36		
DWN	BOYE.QI 2012.07.03	PART NO:2UB3907-000101F	
CHKD	QUAN 2012.07.03	SCALE:4:1	UNIT: mm
APVD	MAX 2012.07.03	SIZE: A3	SHEET:1 OF 1 REV: A

CUSTOMER COPY

文件編號: RD-06-043-A