| REV. | ECN NO OR DESCRIPTION | REVISED | DATE |
|---|---|---|---|
| A | PDR NO: T131205-3A | Edi.Zhou | 2014.06.06 |

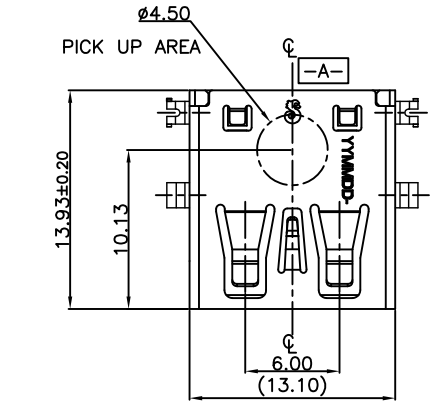


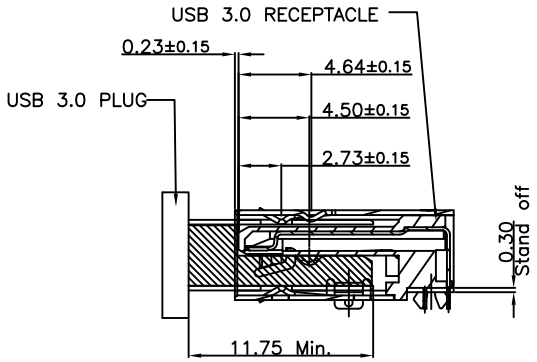


MATED SECTION

SPECIFICATIONS:

1. ELECTRICAL CHARACTERISTICS:
   1-1. CURRENT RATING: 1.8A (PIN1,4) ; OTHER CONTACTS 0.25A
   1-2. CONTACT RESISTANCE: 30m ΩMAX INITIAL FOR PIN 1-4.
   50m ΩMAX INITIAL FOR OTHER PIN.
   1-3. DIELECTRIC WITHSTANDING VOLTAGE: 100V AC FOR 1 MINUTE
   1-4. INSULATION RESISTANCE: 100M ΩMIN .
2. MECHANICAL CHARACTERISTICS:
   2-1. INSERTION FORCE : 3.5 Kgf MAX.
   2-2. WITHDRAWAL FORCE : 3.5Kgf MAX.
   INITIAL : 1.0Kgf.
   TEST AFTER : 0.80Kgf.
3. DURABILITY: 5,000 CYCLES.
4. TO CONFORM TO SINGATRON HAZARDOUS SUBSTANCE FREE SPEC.
5. HALOGEN PRODUCT IDENTIFICATION MARK ON JACK:
6. HALOGEN PRODUCT IDENTIFICATION LABEL ON PACKAGING:
7. FOR WAVE SOLDERING LEAD-FREE PROCESS.
8. DATE : YYMMDD-
9. PACKAGING : TAPE & REEL

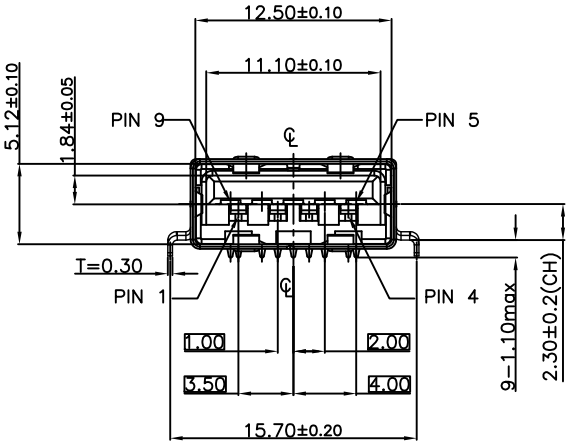


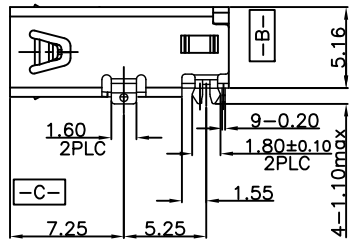


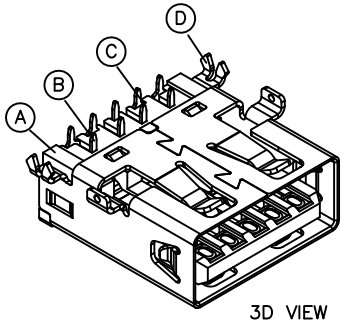


3D VIEW

| REMARK | Pin Number | Signal ASSIGNMENT |
|---|---|---|
| USB2.0 CONTACT PIN | PIN 1 | VBUS |
| | PIN 2 | D- |
| | PIN 3 | D+ |
| | PIN 4 | GND |
| USB3.0 CONTACT PIN | PIN 5 | StdA_SSRX- |
| | PIN 6 | StdA_SSRX+ |
| | PIN 7 | GND_DRAIN |
| | PIN 8 | StdA_SSTX- |
| | PIN 9 | StdA_SSTX+ |

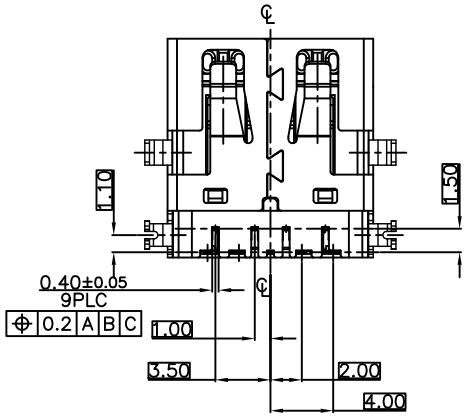


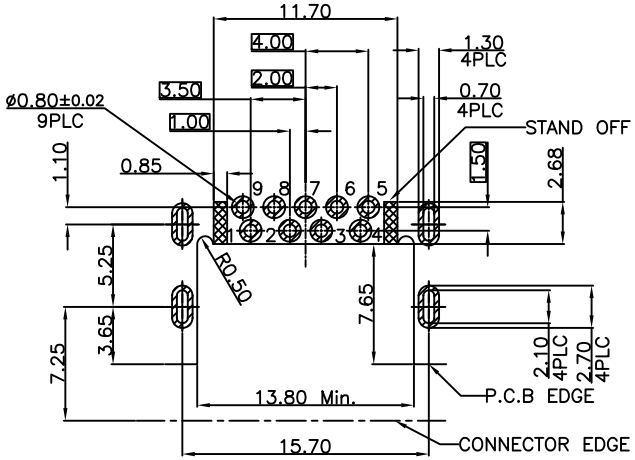


Recommended P.C.B Layout(TOP VIEW)

TOLERANCE=±0.05(THK:1.20mm)

| NO | DESCRIPTION | QTY | MATERIAL | PLATING & COLOR |
|---|---|---|---|---|
| D | SHELL | 1 | STAINLESS STEEL,T=0.30 | NICKEL 60u"MIN |
| C | 5 PIN TERMINAL | 5 | BARSS,T=0.20 | Au 2uin OVER 30uin Pd/Ni PLATED ON CONTACT AREA; Matt Sn 120uin PLATED ON SOLDERING ALL OVER 80uin NICKET PLATING. |
| B | 4 PIN TERMINAL | 4 | COPPER ALLOY, T=0.20 | |
| A | BODY | 1 | HIGH TEMP.THERMOPLASTIC | BLACK |

UNLESS OTHERWISE SPECIFED TOLERANCES

DECIMALS: X :±0.5, X.X :±0.3, X.XX :±0.2

ANGLES: X :±2°, X.X :±1°

Singatron Enterprise Co., Ltd.
信音企業股份有限公司

| | | | |
|---|---|---|---|
| TITLE | USB 3.0 A TYPE FEMALE,R/A,SINKING,CH=2.30 | | |
| DWN | EDI.ZHOU2014.06.06 | PART NO:2UB3907-010101F | |
| CHKD | Boye2014.06.06 | SCALE:4:1 | UNIT: mm |
| APVD | Boye2014.06.06 | SIZE: A3 | SHEET:1 OF 1 REV: A |

CUSTOMER COPY

文件編號: RD-06-043-A