REV.	ECN NO OR DESCRIPTION	REVISED	DATE
A	PDR RELEASE	EVEN	2020.08.18

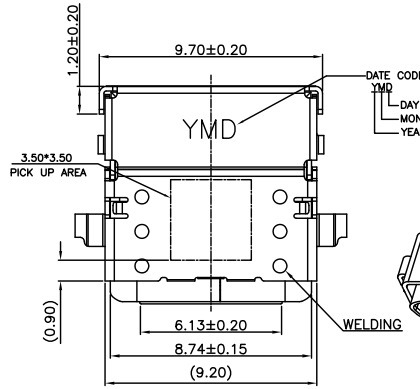

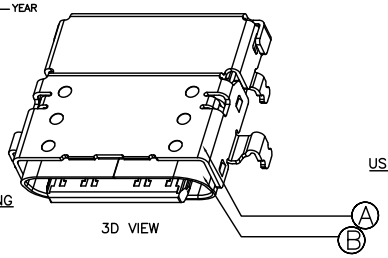

3D VIEW

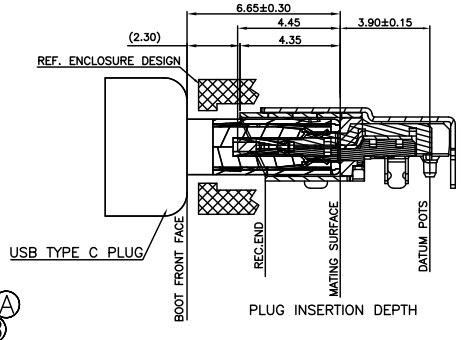

PLUG INSERTION DEPTH

SPECIFICATIONS:

1. ELECTRICAL CHARACTERISTICS:
   - 1-1. CURRENT RATING: 5.0A
   - 1-2. VOLTAGE RATING: 20.0 V
   - 1-3. LLCR: VBUS& GND PINS: 40mΩ/PIN MAX
     OTHER PINS : 40mΩ/PIN MAX
     LLCR MAX. CHANGE OF ALL PINS: 10mΩ
   - 1-4. INSULATION RESISTANCE: 100MΩ MIN
2. MECHANICAL CHARACTERISTICS:
   - 2-1. INSERTION FORCE: 5N~24N.(Before life)
     >0N~24N.(Pre, 1000,2500,4500,10000/CYCLES)
   - 2-2. WITHDRAWAL FORCE: 8N~24N.(Before life)
     6N~24N.(Pre, 1000,2500,4500,10000/CYCLES)
3. DURABILITY: 10,000 CYCLES.
4. TO CONFORM TO THE SINGATRON HAZARDOUS SUBSTANCE FREE SPEC.
5. HALOGEN FREE PRODUCT IDENTIFICATION LABEL ON PACKAGING:
6. PACKAGE: SEE "2UB3C03-520321F" PACKAGE.
7. FOR REFLOW SOLDERING LEAD-FREE PROCESS.
8. OTHER GENERAL SPEC. TO REFER "2UB3C03-520321F SPEC".

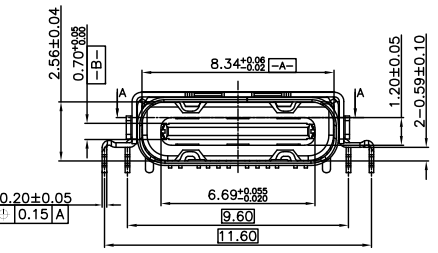

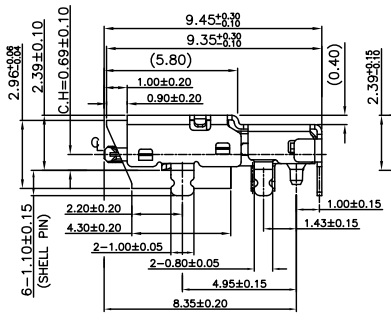

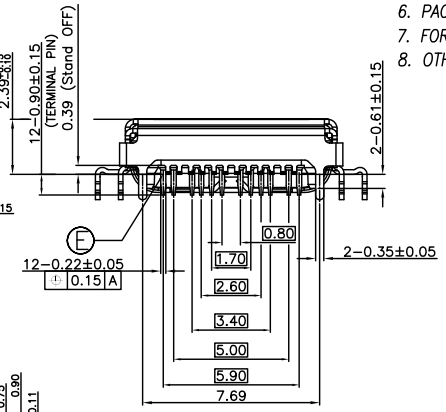

PART NO.
2UB3C03-520321F

- SUFFIX: HALOGEN FREE
- PACKAGE
  1: TAPE & REEL
- HOUSING COLOR
  2: DSM Stanyl HFX61S V2 Black BK27043
- CONTACT PLATING
  3: 30u"Pd/Ni ON MATING AREA, MATTE Sn 60u" Min. ON SOLDERING AREA, 50u" Min. NICKEL UNDER PLATING OVERALL

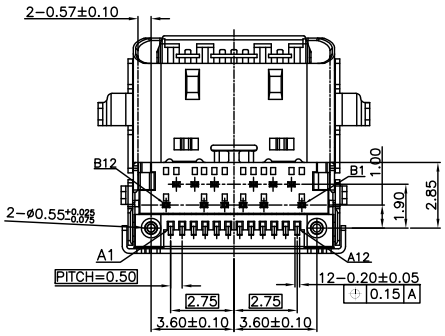

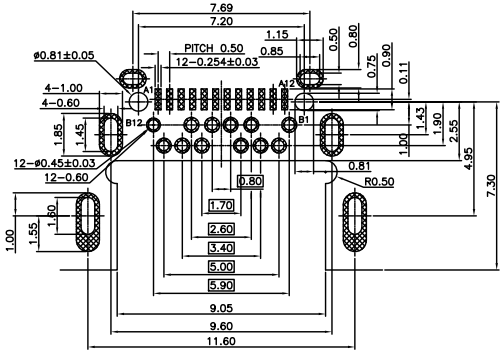

RECOMMENDED PCB LAYOUT(TOP VIEW)
(TOLERANCE=±0.05mm)

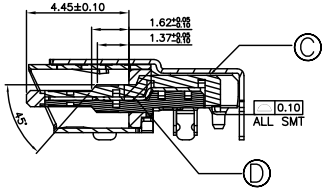

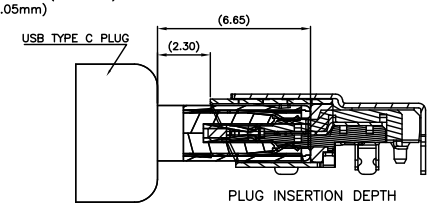

PLUG INSERTION DEPTH

NO	DESCRIPTION	QTY	MATERIAL	PLATING & COLOR
E	TERMINAL	24	C19400-H	SEE PART NO.
D	SIGNAL	1	SUS 301	NICKEL PLATED 50u"MIN.
C	HOUSING	1	DSM Stanyl HFX61S V2 Black BK27043	
B	INNER SHELL	1	SUS 301	50u"Min. BLACK NICKEL
A	OUTSIDE SHELL	1	SUS 301	50u"Min. NICKEL

UNLESS OTHERWISE SPECIFIED TOLERANCES

DECIMALS: X :±0.5, X.X :±0.3, X.XX :±0.2

ANGLES: X :±2°, X.X :±1°

Singatron Enterprise Co., Ltd.
信音企業股份有限公司

TITLE	USB TYPE C , Mid-mount(CH=0.69mm)		
DWN	EVEN 2020.08.18	PART NO. 2UB3C03-520321F	
CHKD		SCALE 1:1	UNIT: mm
APVD	ANGELA2020.08.18	SIZE: A3	SHEET:1 OF 1 REV: A

CUSTOMER COPY

文件編號:RD-06-043-A