REV.	ECN NO OR DESCRIPTION	REVISED	DATE
A	PDR NO.:T170706-7A	Edi.Zhou	2018.03.09

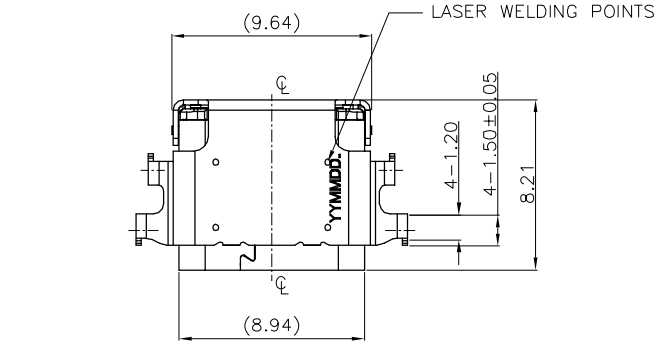

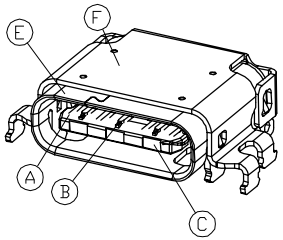

3D VIEW

SPECIFICATIONS:

1. ELECTRICAL CHARACTERISTICS:
   1-1. LLCR:
   VBUS & GND PINS&OTHER PINS: 40mΩ MAX
   AFTER ENVIRONMENT TEST: 50mΩ MAX.
   1-2. CURRENT RATING: 3.0 A Max.
   1-3. VOLTAGE RATING: 5.0 V.
   1-4. INSULATION RESISTANCE: 100MΩ MIN.
   1-5. ENVIRONMENTAL PERFORMANCE:
   OPERATING TEMPERATURE: -55°C-+85°C.
2. MECHANICAL CHARACTERISTICS:
   2-1. MATING FORCE : 0.5-2.0 Kgf.
   2-2. UNMATING FORCE : 0.8-2.0 Kgf.(1~1000CYCLES),0.6-2.0 Kgf.(AFTER 1000 YCLES)
3. LIFE TEST: 10000 CYCLES MIN.
4. TO CONFORM TO SINGATRON HAZARDOUS SUBSTANCE FREE SPEC.
5. HALOGEN FREE PRODUCT IDENTIFICATION MARK ON JACK: ◎
6. HALOGEN FREE PRODUCT IDENTIFICATION LABEL ON PACKAGING: HF
7. FOR REFLOW SOLDERING LEAD-FREE PROCESS.

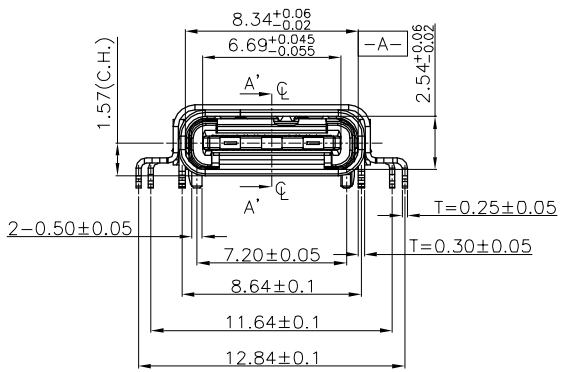

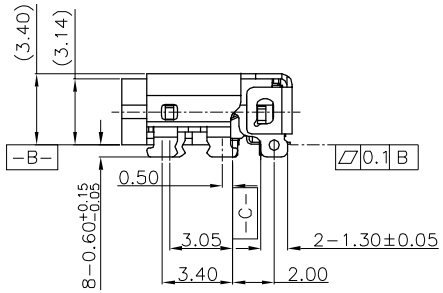

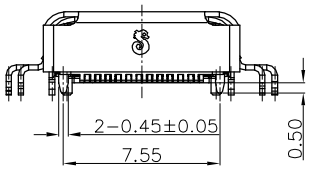

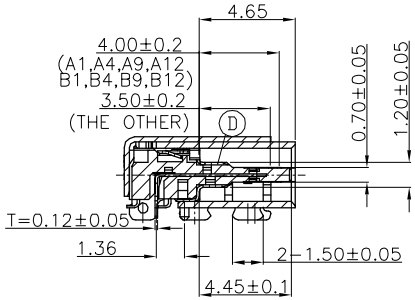

SECTION A'-A'

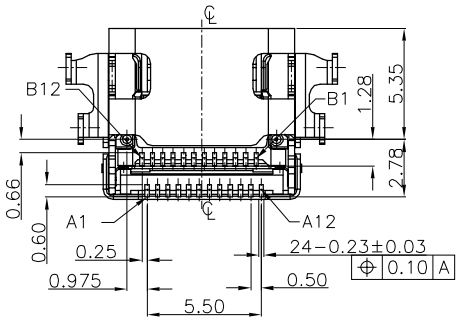

NO	DESCRIPTION	QTY	MATERIAL	PLATING & COLOR
F	TOP SHELL	1	SUS304-1/2H,T=0.25	NICKEL 50u"MIN
E	SHELL	1	SUS304-1/2H,T=0.30	NICKEL 50u"MIN
D	MATE GROUND	1	SUS304-1/2H,T=0.12	N/A
C	MID GROUND	1	SUS301-EH	NICKEL 50u"MIN
B	CONTACT	24	C7035,T=0.12	Au 30uin PLATED ON CONTACT AREA; Matt. Sn 100uin Min.PLATED ON SOLDERING 50uin NICKEL UNDER PLATING OVERALL
A	BODY	1	LCP 6808U UL94-V0	BLACK

UNLESS OTHERWISE SPECIFED TOLERANCES

DECIMALS: X :±0.5, X.X :±0.3, X.XX :±0.2

ANGLES: X :±2°, X.X :±1°

Singatron Enterprise Co., Ltd.
信音企業股份有限公司

TITLE	USB TYPE -C ON BOARD SMT REC(C.H.=1.57)			
DWN	Edi.Zhou	PART NO: 2UB3C08-002111F		
CHKD	Boye	SCALE:4:1	UNIT: mm	
APVD	Boye	SIZE: A3	SHEET:1 OF 2	REV:A

CUSTOMER COPY

文件編號: RD-06-043-A

REV.	ECN NO OR DESCRIPTION	REVISED	DATE
A	PDR NO.:T170706-7A	Edi.Zhou	2018.03.09

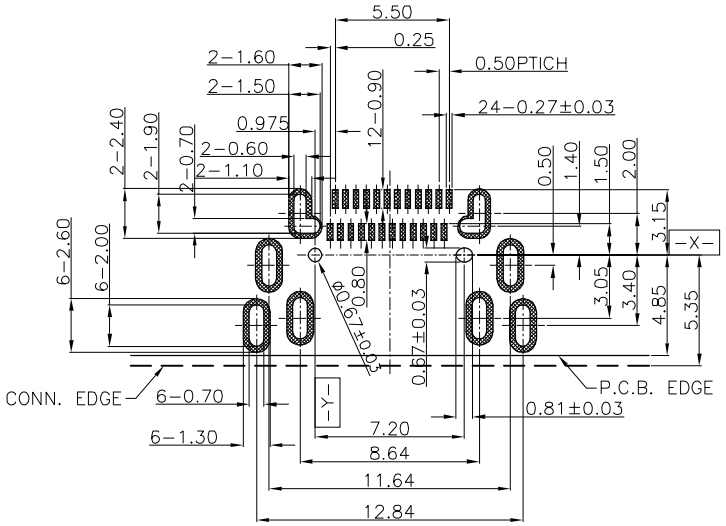

RECOMMENDED P.C.B LAYOUT(TOP VIEW)

TOLERANCE=±0.05(THK:0.8mm)

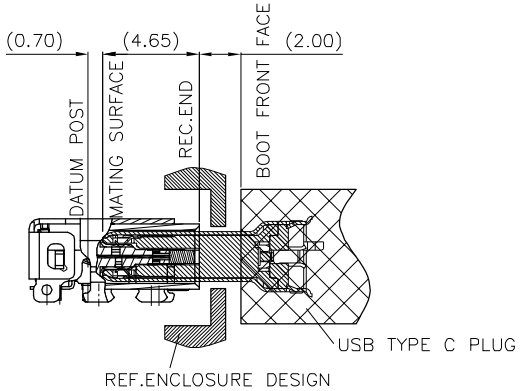

MATING DRAWING

NO.	PIN NUMBER	SINGNAL NAME	NO.	PIN NUMBER	SINGNAL NAME
1	A1	GND	13	B12	GND
2	A2	SSTXp1	14	B11	SSRXp1
3	A3	SSTXn1	15	B10	SSRXn1
4	A4	VBUS	16	B9	VBUS
5	A5	CC1	17	B8	RFU2
6	A6	Dp1	18	B7	Dn2
7	A7	Dn1	19	B6	Dp2
8	A8	RFU1	20	B5	CC2
9	A9	VBUS	21	B4	VBUS
10	A10	SSRXn2	22	B3	SSTXn2
11	A11	SSRXp2	23	B2	SSTXp2
12	A12	GND	24	B1	GND

NO	DESCRIPTION	QTY	MATERIAL	PLATING & COLOR

UNLESS OTHERWISE SPECIFED TOLERANCES

DECIMALS: X :±0.5, X.X :±0.3, X.XX :±0.2

ANGLES: X :±2°, X.X :±1°

Singatron Enterprise Co., Ltd.
信音企業股份有限公司

TITLE	USB TYPE -C ON BOARD SMT REC(C.H.=1.57)		
DWN	Edi.Zhou	PART NO: 2UB3C08-002111F	
CHKD	Boye	SCALE:4:1	UNIT: mm
APVD	Boye	SIZE: A3	SHEET:2 OF 2 REV:A

CUSTOMER COPY

文件編號: RD-06-043-A