PIN ASSIGNMENT(Front)											
A1	A2	A3	A4	A5	A6	A7	A8	A9	A10	A11	A12
GND	TX1+	TX1−	Vbus	CC1	D+	D−	SBU1	Vbus	RX2−	RX2+	GND
GND	RX1+	RX1−	Vbus	SBU2	D−	D+	CC2	Vbus	TX2−	TX2+	GND
B12	B11	B10	B9	B8	B7	B6	B5	B4	B3	B2	B1

REV.	ECN NO OR DESCRIPTION	REVISED	DATE
A	PDR NO.:T200828-2A	ERIC	2021.08.24

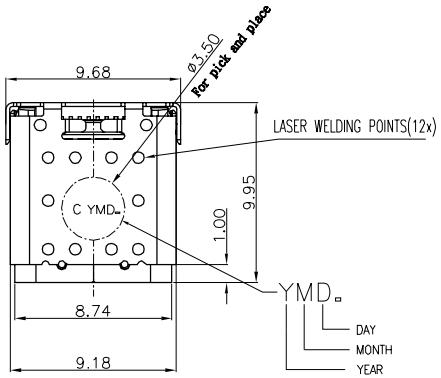

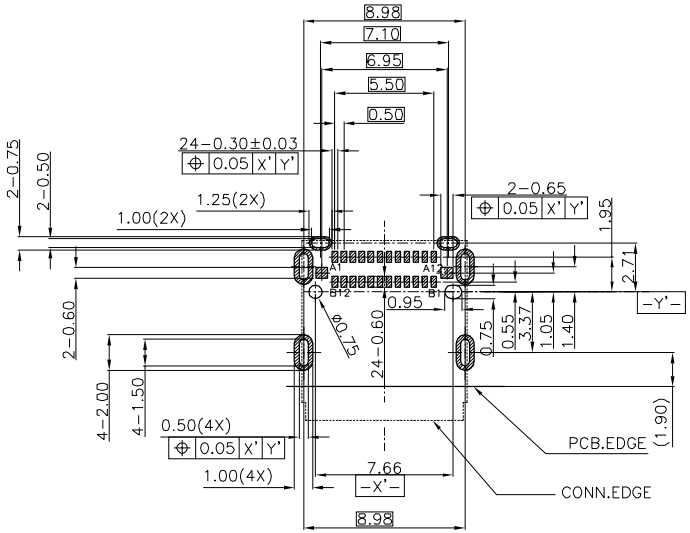

RECOMMENDED P.C.B LAYOUT(TOP VIEW)

TOLERANCE=±0.05(THK:1.00mm)

SPECIFICATIONS:

1. ELECTRICAL CHARACTERISTICS:
   - 1−1. LLCR:
     - VBUS & GND PINS: 40mΩ /PIN MAX.
     - OTHER PINS: 40mΩ /PIN MAX.
     - LLCR MAX. CHANGE OF ALL PINS: 10mΩ.
   - 1−2. CURRENT RATING: 3.0 A Max.
   - 1−3. VOLTAGE RATING: 5.0 V.
   - 1−4. INSULATION RESISTANCE: 100MΩ MIN.
   - 1−5. ENVIRONMENTAL PERFORMANCE:
     - OPERATING TEMPERATURE: −55°C−+85°C.
2. MECHANICAL CHARACTERISTICS:
   - 2−1. MATING FORCE : 5N~20N.
   - 2−2. UNMATING FORCE : 8N~20N. After test 6N~20N.
3. LIFE TEST: 10000 CYCLES MIN.
4. TO CONFORM TO SINGATRON HAZARDOUS SUBSTANCE FREE SPEC.
5. HALOGEN FREE PRODUCT IDENTIFICATION MARK ON JACK:
6. HALOGEN FREE PRODUCT IDENTIFICATION LABEL ON PACKAGING:
7. FOR REFLOW SOLDERING LEAD-FREE PROCESS.

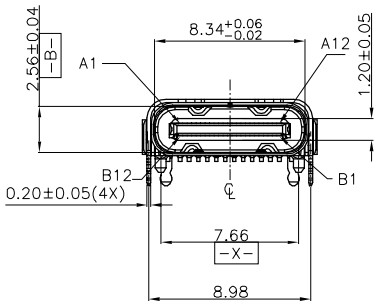

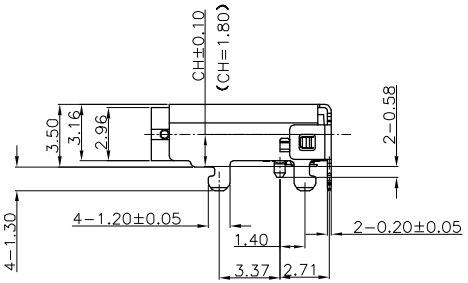

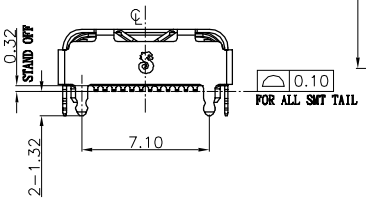

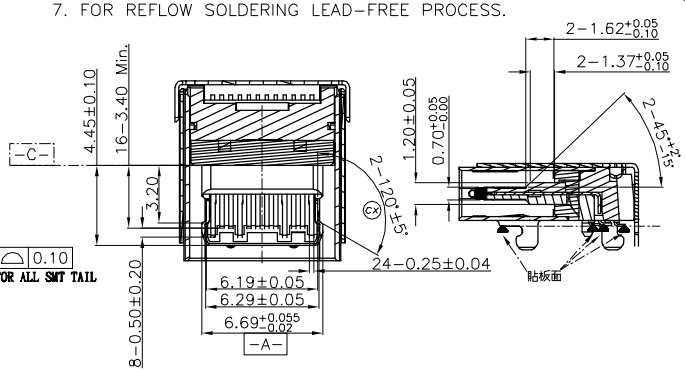

SECTION A−A

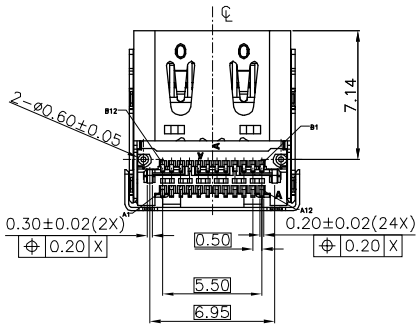

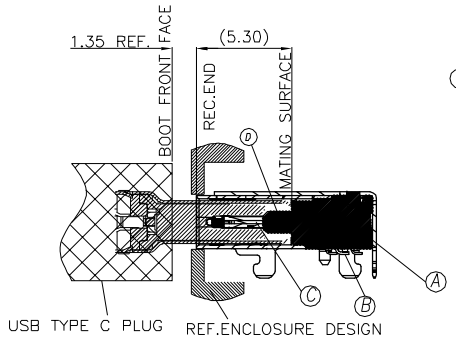

MATING DRAWING

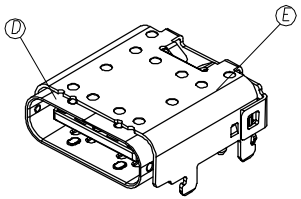

3D VIEW

NO	DESCRIPTION	QTY	MATERIAL	PLATING & COLOR
E	TOP SHELL	1	SUS304,T=0.20mm	80uin Min. SOLDERABLE NICKEL PLATIGN
D	SHELL	1	SUS304, T=0.20mm	80uin Min. SOLDERABLE NICKEL PLATIGN
C	MID-GND	1	SUS301, T=0.15mm	80uin Min. NICKEL PLATIGN 60uin Min. Matt. Tin PLATING ON SOLDERING
B	CONTACT	24	C64775-H, T=0.12mm	30uin Min. Au PLATING ON CONTACT AREA, 60uin Min. Matt. Tin PLATING ON SOLDER TAIL AREA,AND 80uin Min. NICKEL UNDER PLATING.
A	BODY	1	LCP 6808U UL94 V-0	BLACK

UNLESS OTHERWISE SPECIFED TOLERANCES

DECIMALS: X :±0.5, X.X :±0.3, X.XX :±0.2

ANGLES: X :±2°, X.X :±1°

Singatron Enterprise Co., Ltd.
信音企業股份有限公司

TITLE	USB TYPE -C Dual SMT(C.H.=1.80) C2			
DWN	ERIC	PART NO: 2UB3C43-000111F		
CHKD	BOYE	SCALE:4:1	UNIT: mm	
APVD	LIAO	SIZE: A3	SHEET:1 OF 1	REV:A

CUSTOMER COPY

文件編號: RD-06-043-A