REV.	ECN NO OR DESCRIPTION	REVISED	DATE
A	PDR NO:T160830-2A	peng	2016.11.02

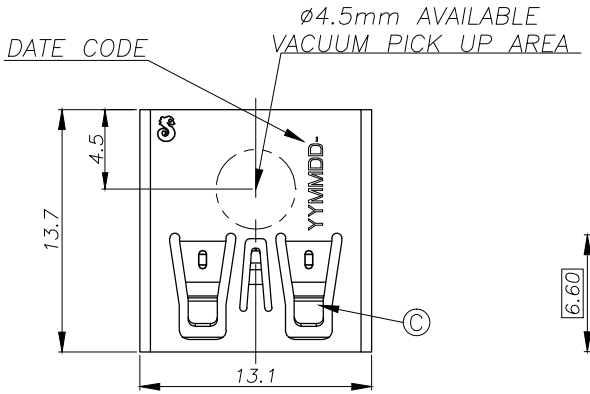

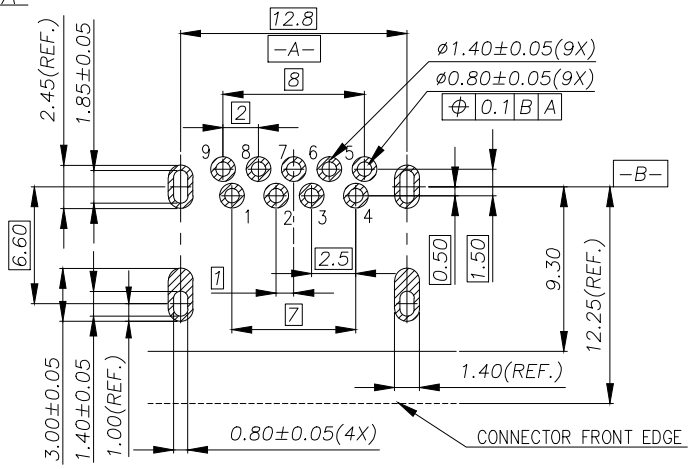

Recommended P.C.B Layout (THICKNESS=1.2mm)
(Component Side) TOLERANCE=±0.03 TOP VIEW

SPECIFICATIONS:

1. ELECTRICAL CHARACTERISTICS:
   1-1. CURRENT RATING: 1.8A (PIN1,4) ; OTHER CONTACTS 0.25A
   1-2. CONTACT RESISTANCE: 30mΩ MAX.
   1-3. DIELECTRIC WITHSTANDING VOLTAGE: 100V AC FOR 1 MINUTE
   1-4. INSULATION RESISTANCE: 100MΩ MIN
2. MECHANICAL CHARACTERISTICS:
   2-1. INSERTION FORCE : 3.5 Kgf MAX
   2-2. WITHDRAWAL FORCE : 1.0 Kgf MIN(INITIAL),0.8 Kgf MIN(AFTER TEST)
3. DURABILITY: 5,000 CYCLES.
4. TO CONFORM TO SINGATRON HAZARDOUS SUBSTANCE FREE SPEC.
5. HALOGEN FREE IDENTIFICATION MARK ON JACK:◎
6. HALOGEN FREE IDENTIFICATION LABEL ON PACKAGING:
7. FOR WAVE SOLDERING LEAD-FREE PROCESS.
8. DATE : YYMMDD
9. PACKAGING : TAPE & REEL.

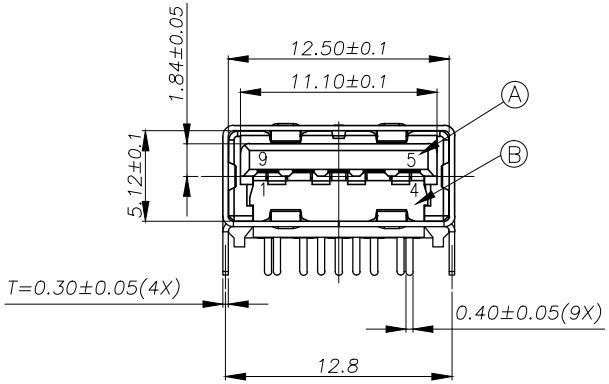

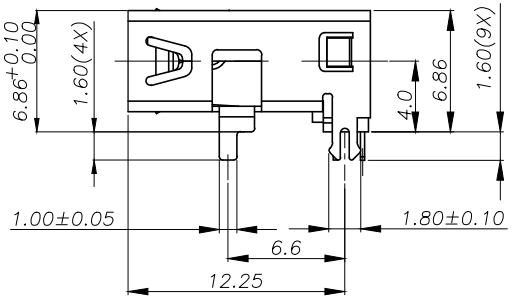

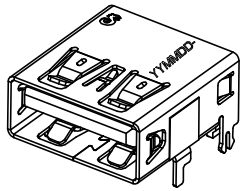

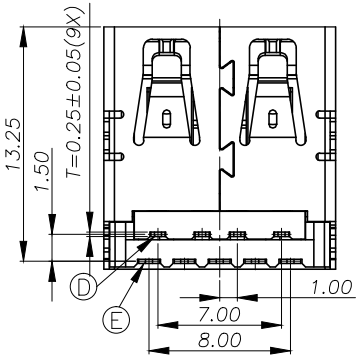

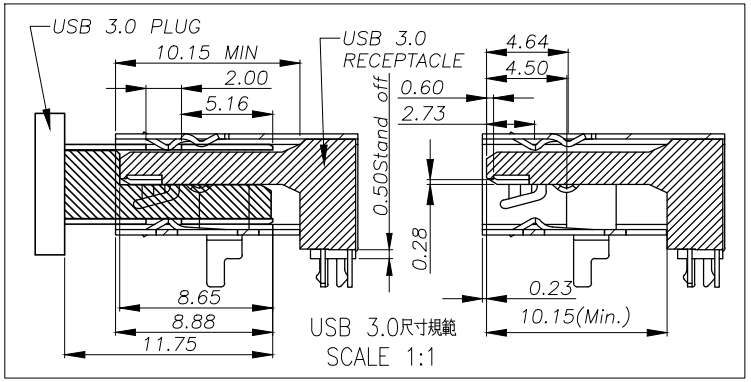

Pin Number	Signal ASSIGNMENT
PIN 1	VBUS
PIN 2	D-
PIN 3	D+
PIN 4	GND
PIN 5	StdA_SSRX-
PIN 6	StdA_SSRX+
PIN 7	GND_DRAIN
PIN 8	StdA_SSTX-
PIN 9	StdA_SSTX+

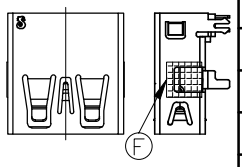

MYLAR位置示意圖 4:1

NO	DESCRIPTION	QTY	MATERIAL	PLATING & COLOR
F	MYLAR	2	4mm*4mm	YELLOW
E	TERMINAL	5	C2680-H 0.25t	2u"Au+Pd/Ni30u" OVER PLATED ON MATING AREA, 120u" SN PLATED ON SOLDERING 80u" NICKEL UNDER PLATING OVERALL
D	TERMINAL	4	C5210-EH 0.25t	2u"Au+Pd/Ni30u" OVER PLATED ON MATING AREA, 120u" SN PLATED ON SOLDERING 80u" NICKEL UNDER PLATING OVERALL
C	SHELL	1	SUS304-1/2H 0.3t	NICKEL 60u"MIN
B	BASE	1	PA-9T,GP2450NH	BLACK
A	HOUSING	1	PA-9T,GP2450NH	BLACK

UNLESS OTHERWISE SPECIFED TOLERANCES

Singatron Enterprise Co., Ltd.
信音企業股份有限公司

DECIMALS: X :±0.5, X.X :±0.3, X.XX :±0.2
ANGLES: X :±2°, X.X :±1°

TITLE	USB 3.0 CONNECTOR		
DWN	peng	PART NO.2UB4006-311101F	
CHKD	james	SCALE 1:1	UNIT: mm
APVD	boye	SIZE: A3	SHEET:1 OF 1	REV: A

CUSTOMER COPY

文件編號 RD-06-043-A