REV.	ECN NO OR DESCRIPTION	REVISED	DATE
A	PDR NO:T141017-1A	Edi.Zhou	2015.05.19

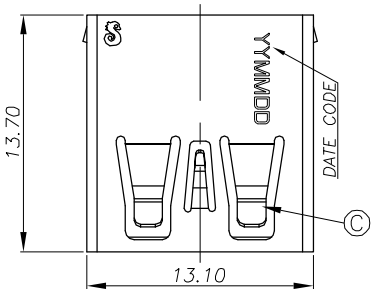

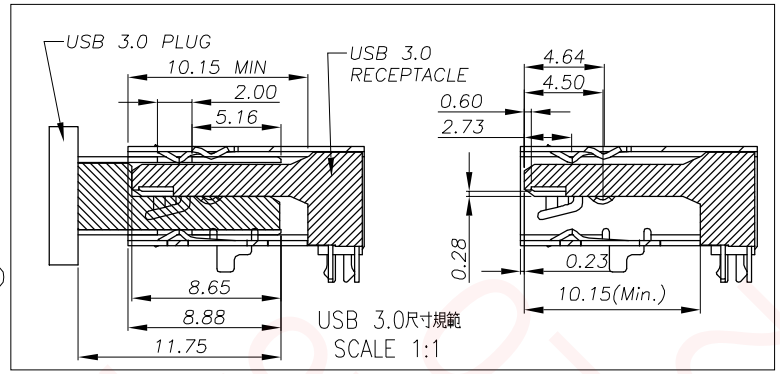

SPECIFICATIONS:

1. ELECTRICAL CHARACTERISTICS:
   1-1. CURRENT RATING: 1.8A (PIN1,4) ; OTHER CONTACTS 0.25A
   1-2. CONTACT RESISTANCE: 30mΩ MAX.
   1-3. DIELECTRIC WITHSTANDING VOLTAGE: 100V AC FOR 1 MINUTE
   1-4. INSULATION RESISTANCE: 100MΩ MIN
2. MECHANICAL CHARACTERISTICS:
   2-1. INSERTION FORCE : 3.5 Kgf MAX
   2-2. WITHDRAWAL FORCE : 1.0 Kgf MIN
3. DURABILITY: 5,000 CYCLES.
4. TO CONFORM TO SINGATRON HAZARDOUS SUBSTANCE FREE SPEC.
5. HALOGEN FREE IDENTIFICATION MARK IN JACK:
6. HALOGEN FREE IDENTIFICATION LABEL ON PACKAGING:
7. FOR WAVE SOLDERING LEAD-FREE PROCESS.
8. DATE : YYMMDD
9. PACKAGING : TAPE & REEL.
10. THIS PRODUCT HAS BOARD LOCK FUNCTION ON SOLDER TAIL, SO IT IS NOT SUITABLE FOR APPLICATION IN PICK AND PLACE ON PCB BY AUTOMATIC PROCESS

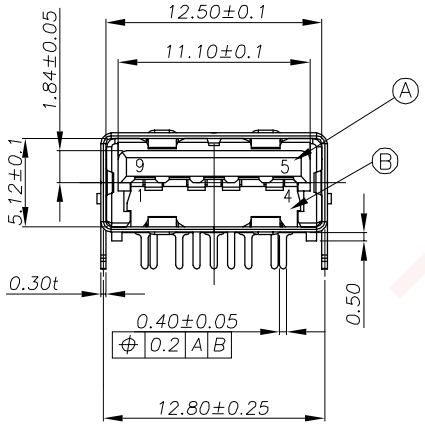

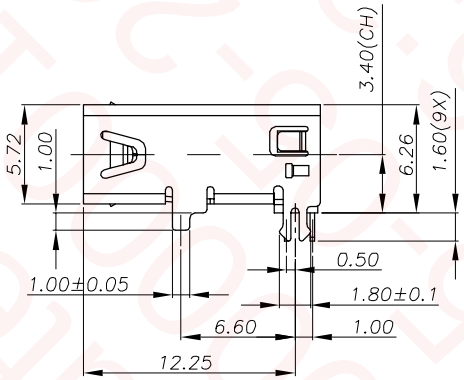

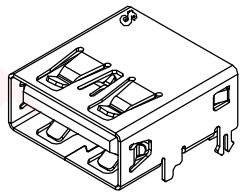

3D VIEW

Pin Number	Signal ASSIGNMENT
PIN 1	VBUS
PIN 2	D-
PIN 3	D+
PIN 4	GND
PIN 5	StdA_SSRX-
PIN 6	StdA_SSRX+
PIN 7	GND_DRAIN
PIN 8	StdA_SSTX-
PIN 9	StdA_SSTX+

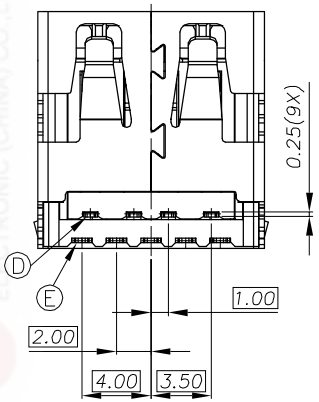

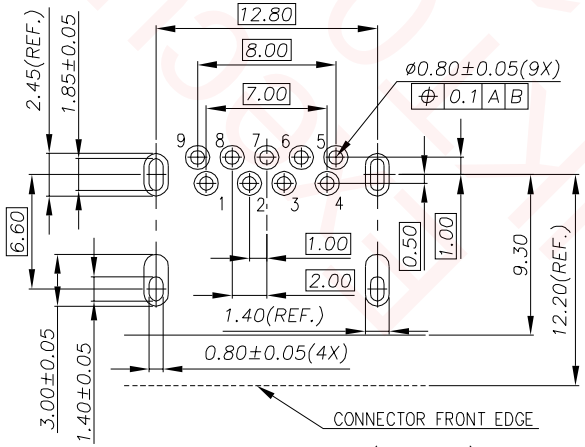

Recommended P.C.B Layout (THK:1.0mm)
(Component Side) TOLERANCE=±0.03 TOP VIEW

NO	DESCRIPTION	QTY	MATERIAL	PLATING & COLOR
E	TERMINAL	5	COPPER ALLOY	GOLD FLASH PLATED ON MATING AREA, 120u" Sn PLATED ON SOLDERING 50u"NICKEL UNDER PLATING OVERALL
D	TERMINAL	4	COPPER ALLOY	GOLD FLASH PLATED ON MATING AREA, 120u" Sn PLATED ON SOLDERING 50u"NICKEL UNDER PLATING OVERALL D1
C	SHELL	1	STAINLESS STEEL	NICKEL 60u"MIN
B	BASE	1	PA9T UL94-HB	BLACK
A	HOUSING	1	PA9T UL94-HB	BLACK

UNLESS OTHERWISE SPECIFED TOLERANCES

DECIMALS: X :±0.5, X.X :±0.3, X.XX :±0.2

ANGLES: X :±2°, X.X :±1°

Singatron Enterprise Co., Ltd.
信音企業股份有限公司

TITLE	USB 3.0 CONNECTOR		
DWN	Edi.Zhou	PART NO.2UB4006-400401F	
CHKD	Boye	SCALE 1:1	UNIT: mm
APVD	Boye	SIZE: A3	SHEET:1 OF 1 REV:A

CUSTOMER COPY

文件編號:RD-06-043-A