REV.	ECN NO OR DESCRIPTION	REVISED	DATE
A	PRODUCT RELEASE	Victor	2013.09.30

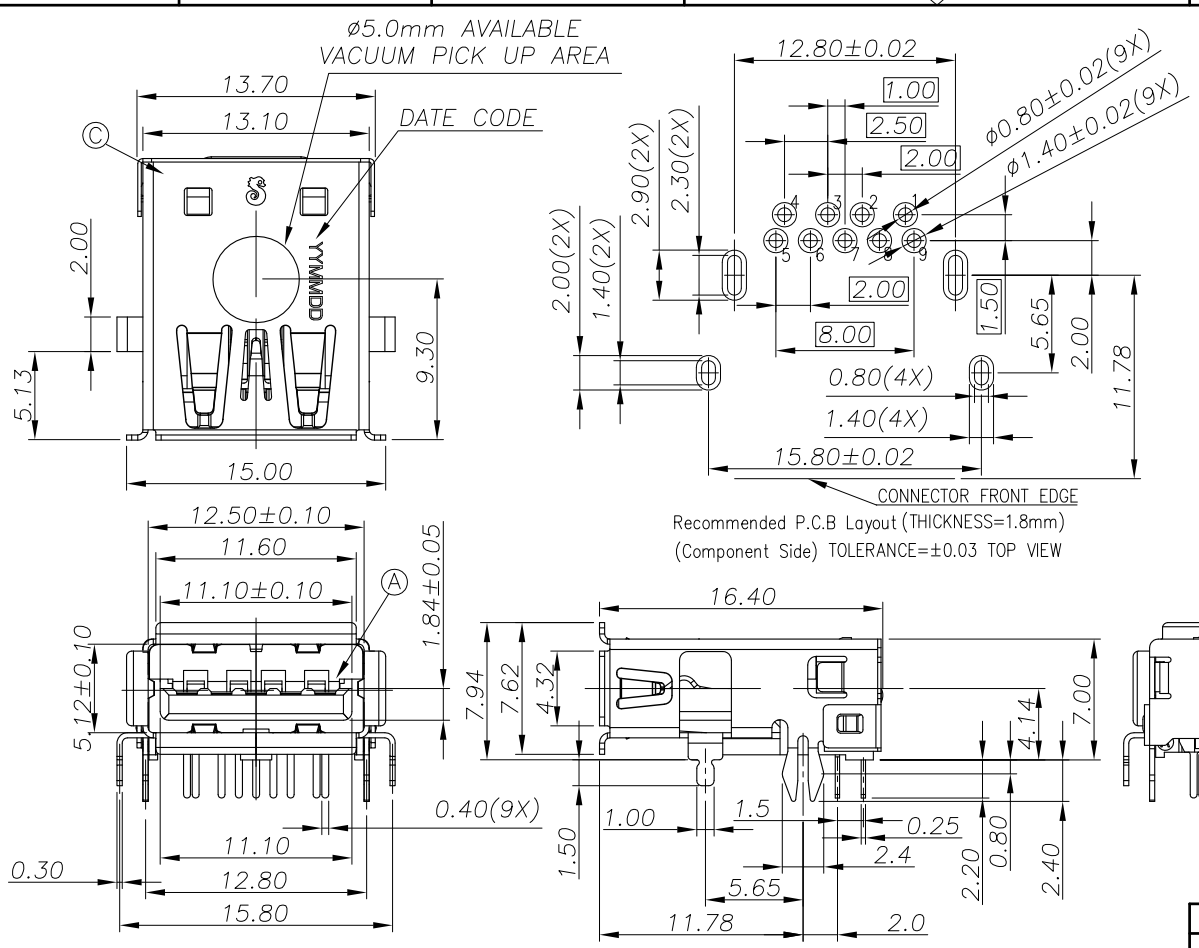

SPECIFICATIONS:

1. ELECTRICAL CHARACTERISTICS:
   1-1. CURRENT RATING: 1.8A (PIN1,4) ; OTHER CONTACTS 0.25A
   1-2. CONTACT RESISTANCE: 30mΩ MAX.
   1-3. DIELECTRIC WITHSTANDING VOLTAGE: 100V AC FOR 1 MINUTE
   1-4. INSULATION RESISTANCE: 100MΩ MIN
2. MECHANICAL CHARACTERISTICS:
   2-1. INSERTION FORCE : 3.5 Kgf MAX
   2-2. WITHDRAWAL FORCE : 1.0 Kgf~2.5 Kgf (INITIAL)
   0.8 Kgf~2.5 Kgf (AFTER TEST)
3. DURABILITY: 5,000 CYCLES.
4. TO CONFORM TO SINGATRON HAZARDOUS SUBSTANCE FREE SPEC.
5. HALOGEN FREE IDENTIFICATION MARK ON JACK:
6. HALOGEN FREE IDENTIFICATION LABEL ON PACKAGING:
7. FOR IR RE-FLOW PROCESS.
8. DATE : YYMMDD
9. PACKAGING : TAPE & REEL.

Pin Number	Signal ASSIGNMENT
PIN 1	VBUS
PIN 2	D-
PIN 3	D+
PIN 4	GND
PIN 5	StdA_SSRX-
PIN 6	StdA_SSRX+
PIN 7	GND_DRAIN
PIN 8	StdA_SSTX-
PIN 9	StdA_SSTX+

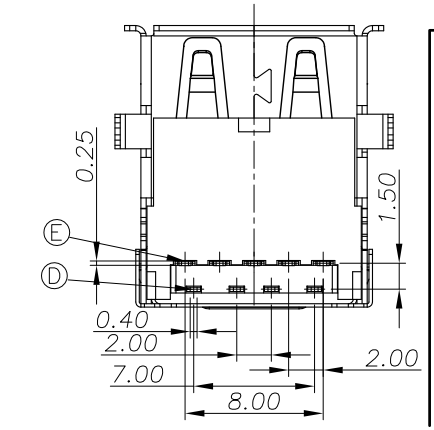

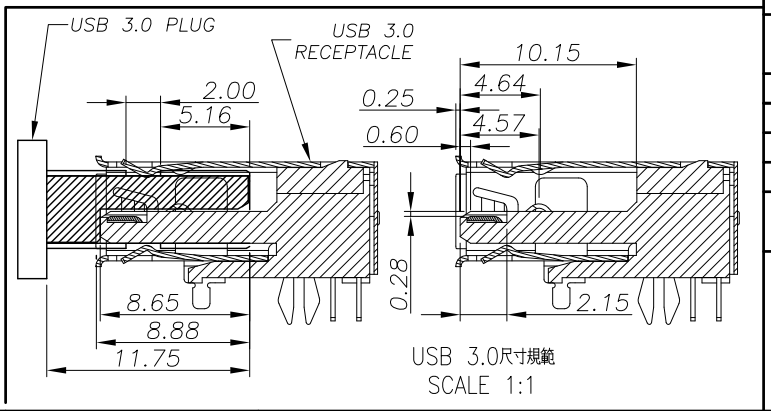

NO	DESCRIPTION	QTY	MATERIAL	PLATING & COLOR
F	SHELL COVER	1	STAINLESS STEEL	
E	TERMINAL	5	COPPER ALLOY	2u"Au+Pd/Ni30u" OVER PLATED ON MATING AREA, 100u" MATTE SN PLATED ON SOLDERING 80u"NICKEL UNDER PLATING OVERALL
D	TERMINAL	4	COPPER ALLOY	2u"Au+Pd/Ni30u" OVER PLATED ON MATING AREA, 100u" MATTE SN PLATED ON SOLDERING 80u"NICKEL UNDER PLATING OVERALL
C	SHELL	1	STAINLESS STEEL	NICKEL 60u"MIN
B	BASE	1	PA-9T+45%GF-94V0	BLUE (300C)
A	HOUSING	1	PA-9T+45%GF-94V0	BLUE (300C)

UNLESS OTHERWISE SPECIFED TOLERANCES

DECIMALS: X :±0.5, X.X :±0.4, X.XX :±0.3

ANGLES: X :±2°, X.X :±1°

Singatron Enterprise Co., Ltd.
信音企業股份有限公司

TITLE	USB 3.0 REVERSE CONNECTOR		
DWN	VICTOR	PART NO.2UB4007-700201F	
CHKD		SCALE 1:1	UNIT: mm
APVD	ACHENG 2013.9.30	SIZE: A3	SHEET:1 OF 1 REV: A

CUSTOMER COPY

文件編號 RD-06-043-A