REV.	ECN NO OR DESCRIPTION	REVISED	DATE
A	PDR NO : T121101-6B	ERIC	2013.06.19

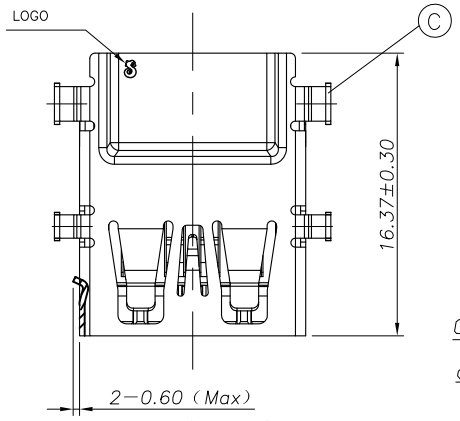

MATTING PLUG AFTER

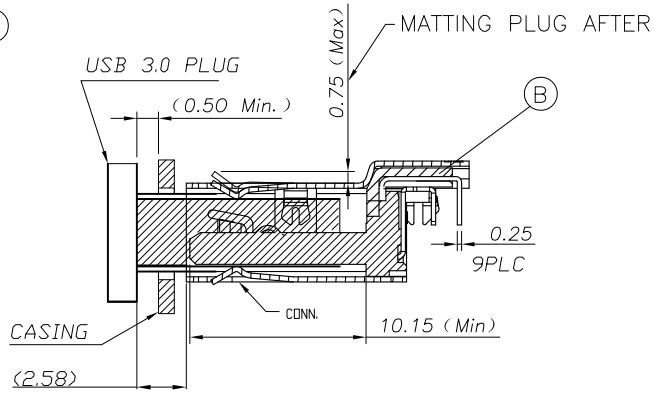

SPECIFICATIONS:

1. ELECTRICAL CHARACTERISTICS:
   1-1. CURRENT RATING: 1.8A (PIN1,4) ; OTHER CONTACTS 0.25A
   1-2. CONTACT RESISTANCE: 30mΩMAX.
   1-3. DIELECTRIC WITHSTANDING VOLTAGE: 100V AC FOR 1 MINUTE
   1-4. INSULATION RESISTANCE: 100MΩMIN
2. MECHANICAL CHARACTERISTICS:
   2-1. INSERTION FORCE : 3.5 Kgf MAX
   2-2. WITHDRAWAL FORCE : 1.0 Kgf MIN TEST BEFORE,0.80 Kgf MIN TEST AFTER
3. DURABILITY: 5,000 CYCLES.
4. TO CONFORM TO SINGATRON HAZARDOUS SUBSTANCE FREE SPEC.
5. HALOGEN PRODUCT IDENTIFICATION MARK ON JACK:◎
6. HALOGEN PRODUCT IDENTIFICATION LABEL ON PACKAGING:
7. FOR WAVE SOLDERING LEAD-FREE PROCESS.
8. DATE : YYMMDD
9. PACKAGING : TAPE & REEL.

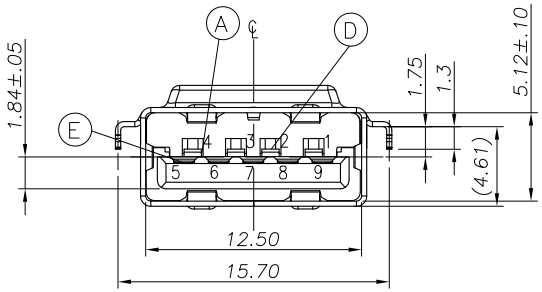

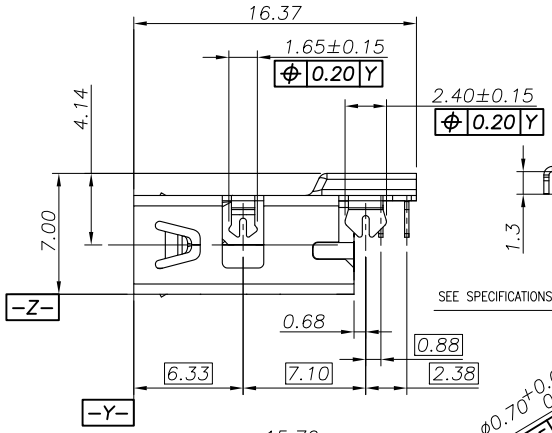

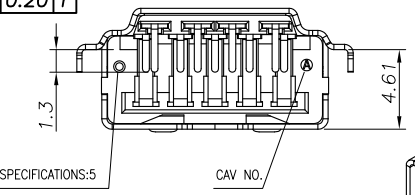

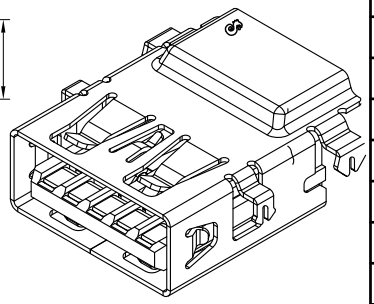

3D VIEW

Pin Number	Signal NAME
1	VBUS
2	D-
3	D+
4	GND
5	StdA_SSRX-
6	StdA_SSRX+
7	GND_DRAIN
8	StdA_SSTX-
9	StdA_SSTX+

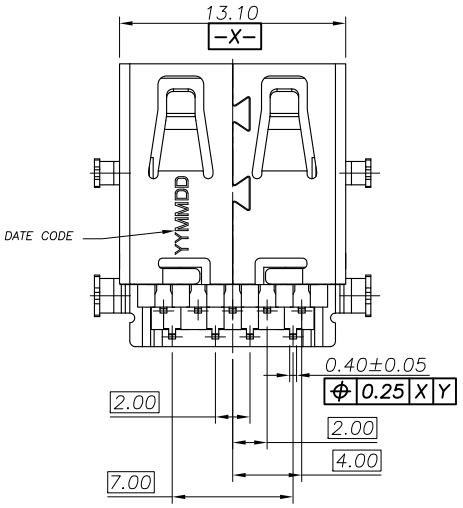

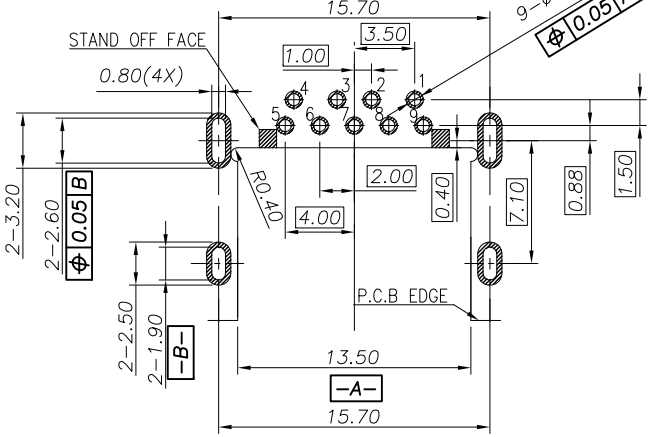

Recommended P.C.B Layout(THICKNESS=1.2mm)
(Component Side)TOLERANCE=±0.03

NO	DESCRIPTION	QTY	MATERIAL	PLATING & COLOR
E	TERMINAL	5	COOPER ALLOY(T=0.25)	5u"Au ON CONTACT AREA, 120u" MATTE SN PLATED ON SOLDERING 50u"NICKEL UNDER PLATING OVERALL
D	TERMINAL	4	COOPER ALLOY(T=0.25)	
C	SHELL	1	STAINLESS STEEL(T=0.30)	NICKEL 60u"MIN
B	BASE	1	HIGH THERMOPLASTIC	BLUE (300C)
A	HOUSING	1	HIGH THERMOPLASTIC	BLUE (300C)

UNLESS OTHERWISE SPECIFED TOLERANCES

DECIMALS: X :±0.5, X.X :±0.3, X.XX :±0.2

ANGLES: X :±2°, X.X :±1°

Singatron Enterprise Co., Ltd.
信音企業股份有限公司

TITLE	USB 3.0 REVERSE CONNECTOR		
DWN	ERIC 2013/06/19	PART NO.2UB4008-150101F	
CHKD	KEVIN 2013/06/19	SCALE 1:1	UNIT: mm
APVD	QUAN 2013/06/19	SIZE: A3	SHEET:1 OF 1 REV: A

CUSTOMER COPY

文件編號 RD-06-043-A