| REV. | ECN NO OR DESCRIPTION | REVISED | DATE |
|---|---|---|---|
| A | PDR NO:T131121-5B | Eric | 2014.03.25 |
| B | ECN NO:S202009-C13 | chenlong | 2020.09.24 |

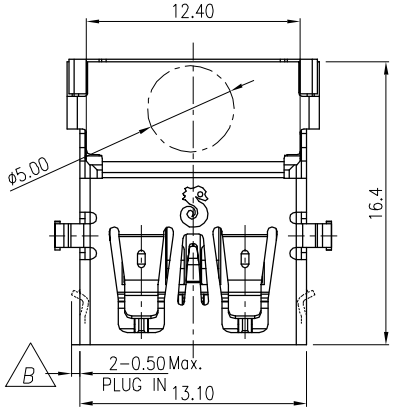


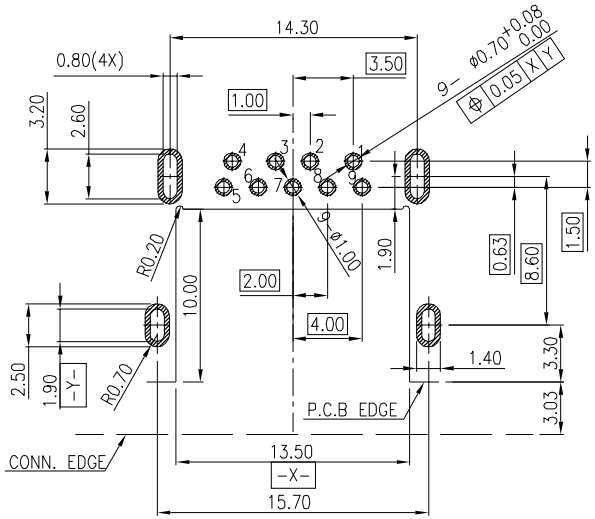


Recommended P.C.B Layout (THICKNESS=1.2mm)
(Component Side) TOLERANCE=±0.03

SPECIFICATIONS:

1. ELECTRICAL CHARACTERISTICS:
   1-1. CURRENT RATING: 1.8A (PIN1,4) ; OTHER CONTACTS 0.25A
   1-2. CONTACT RESISTANCE: 30mΩ MAX.(PIN1,4) 50mΩ MAX.(OTHER PIN)
   1-3. DIELECTRIC WITHSTANDING VOLTAGE: 100V AC FOR 1 MINUTE
   1-4. INSULATION RESISTANCE: 100MΩ MIN .
2. MECHANICAL CHARACTERISTICS:
   2-1. INSERTION FORCE : 3.5 Kgf MAX.
   2-2. WITHDRAWAL FORCE : 1.0~3.5Kgf
        INITIAL : 1.0~3.5Kgf.
        TEST AFTER : 0.80~3.5Kgf.
3. DURABILITY: 5,000 CYCLES.
4. MEET USB3.0 STANDARD SPECIFICATION.
5. RECOMMENDED PROCESS: WAVE SOLDER,265±5°C,3-5 SECONDS.
6. TO CONFORM TO SINGATRON HAZARDOUS SUBSTANCE FREE SPEC.
7. HALOGEN PRODUCT IDENTIFICATION MARK ON JACK:
8. HALOGEN PRODUCT IDENTIFICATION LABEL ON PACKAGING:
9. FOR WAVE SOLDERING LEAD-FREE PROCESS.
10. DATE : YYMMDD-
11. PACKAGING : TAPE&REEL

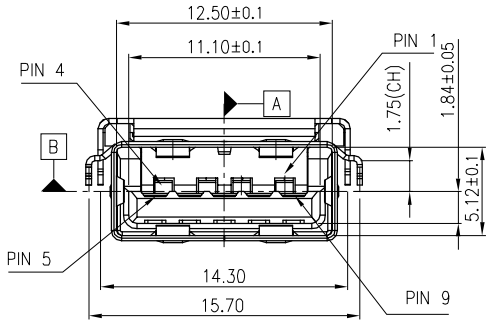


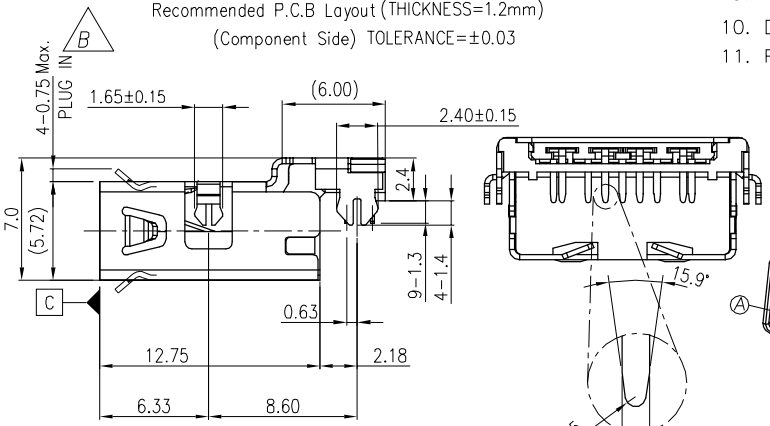


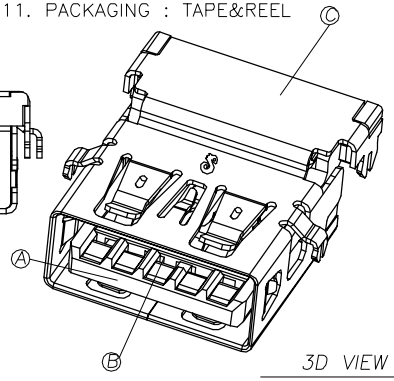


3D VIEW

| REMARK | Pin Number | Signal NAME |
|---|---|---|
| USB2.0 CONTACT PIN | 1 | VBUS |
| | 2 | D- |
| | 3 | D+ |
| | 4 | GND |
| USB3.0 CONTACT PIN | 5 | StdA_SSRX- |
| | 6 | StdA_SSRX+ |
| | 7 | GND_DRAIN |
| | 8 | StdA_SSTX- |
| | 9 | StdA_SSTX+ |

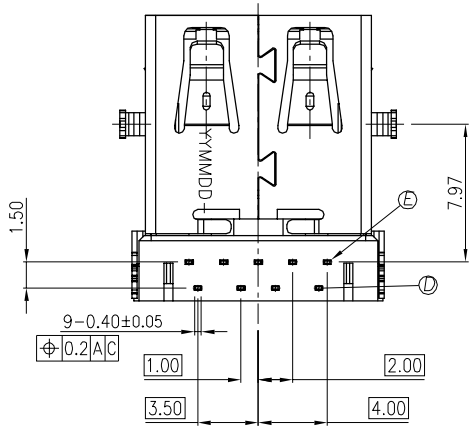


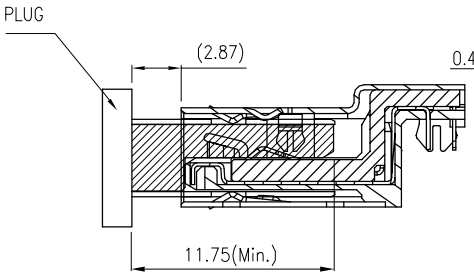


MATED SECTION

| NO | DESCRIPTION | QTY | MATERIAL | PLATING & COLOR |
|---|---|---|---|---|
| E | TERMINAL | 5 | COOPER ALLOY T0.2 | 30u" (Min.)AU ON CONTACT AREA, 100u"(Min.) MATTE SN PLATED ON SOLDERING 60u"(Min.)NICKEL UNDER PLATING OVERALL |
| D | TERMINAL | 4 | COOPER ALLOY T0.2 | |
| C | SHELL | 1 | STAINLESS T0.3 | NICKEL 60u"MIN |
| B | BASE | 1 | HIGH THERMOPLASTIC UL 94V-HB | BLACK |
| A | HOUSING | 1 | | BLACK |

UNLESS OTHERWISE SPECIFED TOLERANCES

DECIMALS: X :±0.5, X.X :±0.3, X.XX :±0.2
ANGLES: X :±2°, X.X :±1°

Singatron Enterprise Co., Ltd.
信音企業股份有限公司

| | | | |
|---|---|---|---|
| TITLE | USB 3.0 REVERSE CONNECTOR | | |
| DWN | chenlong | PART NO.2UB4008-250101F | |
| CHKD | JAMES | SCALE 1:1 | UNIT: mm |
| APVD | BOYE | SIZE: A3 | SHEET:1 OF 1 REV:B |

CUSTOMER COPY

文件編號 RD-06-043-A