REV.	ECN NO OR DESCRIPTION	REVISED	DATE
A	PRODUCT RELEASE	VICTOR	2011.07.25
B	ECN NO : T120004	VICTOR	2012.01.17
C	ECN NO : T120052	GEAR	2012.06.19
D	ECN NO : T140006	STRONG	2014.03.07

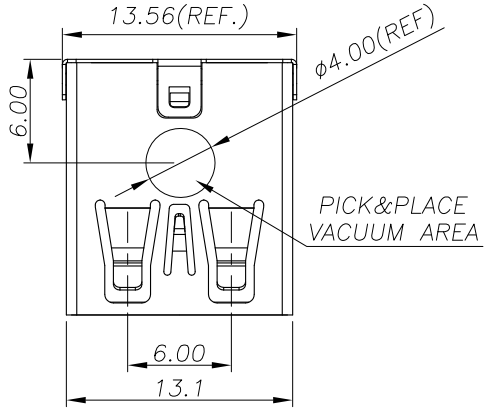

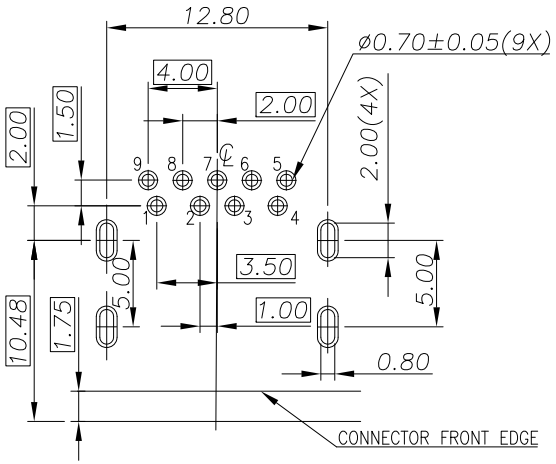

Recommended P.C.B Layout (THICKNESS=1.2mm)
(Component Side) TOLERANCE=±0.03

SPECIFICATIONS:

1. ELECTRICAL CHARACTERISTICS:
   1-1. CURRENT RATING: 1.8A (PIN1,4) ; OTHER CONTACTS 0.25A
   1-2. CONTACT RESISTANCE: 30mΩ MAX.
   1-3. DIELECTRIC WITHSTANDING VOLTAGE: 100V AC FOR 1 MINUTE
   1-4. INSULATION RESISTANCE: 100MΩ MIN
2. MECHANICAL CHARACTERISTICS:
   2-1. INSERTION FORCE : 3.5 Kgf MAX
   2-2. WITHDRAWAL FORCE : 1.0 Kgf MIN
3. DURABILITY: 5,000 CYCLES.
4. TO CONFORM TO SINGATRON HAZARDOUS SUBSTANCE FREE SPEC.
5. (D) HALOGEN FREE IDENTIFICATION MARK ON JACK: ◎
6. (D) HALOGEN FREE IDENTIFICATION LABEL ON PACKAGING:
7. FOR WAVE SOLDERING LEAD-FREE PROCESS.
8. DATE : YYMMDD
9. PACKAGING : TAPE & REEL.

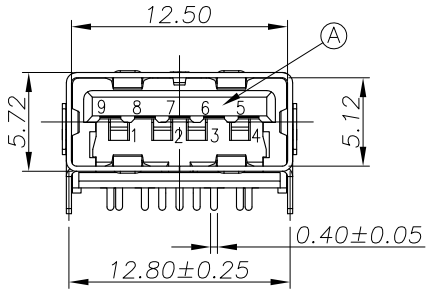

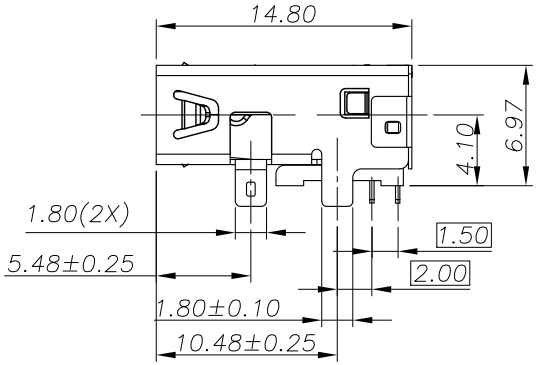

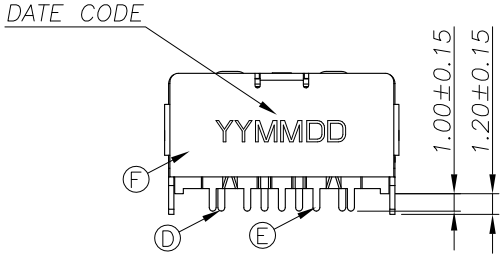

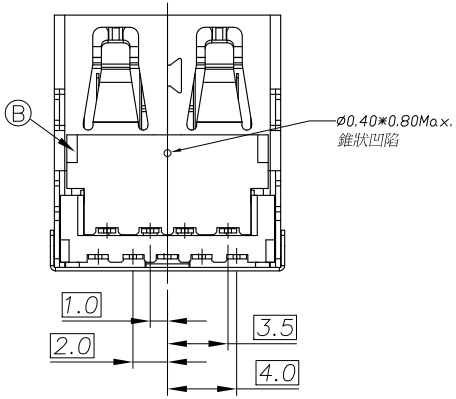

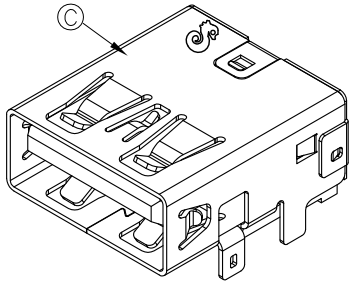

NO	DESCRIPTION	QTY	MATERIAL	PLATING & COLOR
F	SHELL COVER	1	STAINLESS STEEL	
E	TERMINAL	5	COOPER ALLOY	5u"GOLD OVER 30u"Pd PLATED ON MATING AREA,GOLD FLASH PLATED ON SOLDERING 50u"NICKEL UNDER PLATING OVERALL
D	TERMINAL	4	COOPER ALLOY	5u"GOLD OVER 30u"Pd PLATED ON MATING AREA, GOLD FLASH PLATED ON SOLDERING 50u"NICKEL UNDER PLATING OVERALL
C	SHELL	1	STAINLESS STEEL	NICKEL 60u"MIN
B	BASE	1	THERMOPLASTIC	BLACK
A	HOUSING	1	THERMOPLASTIC	BLACK

UNLESS OTHERWISE SPECIFED TOLERANCES

Singatron Enterprise Co., Ltd.
信音企業股份有限公司

DECIMALS: X :±0.5 X.X :±0.3 X.XX :±0.2
ANGLES: X :±2° X.X :±1°

TITLE	USB 3.0 CONNECTOR		
DWN	STRONG 2014.3.7	PART NO.2UB4013-000101	
CHKD		SCALE 1:1	UNIT: mm
APVD	ACHENG	SIZE: A3	SHEET:1 OF 1 REV: D

CUSTOMER COPY

文件編號 RD-06-043-A