REV.	ECN NO OR DESCRIPTION	REVISED	DATE
E	ECN NO.: T120127	Victor	2012.10.15
F	ECN NO.: S121223	ANGUS	2013.06.10
G	ECR NO.: S140308	ANDY	2014.05.06

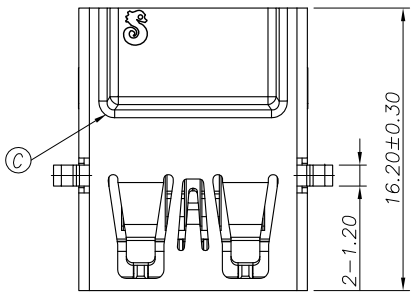

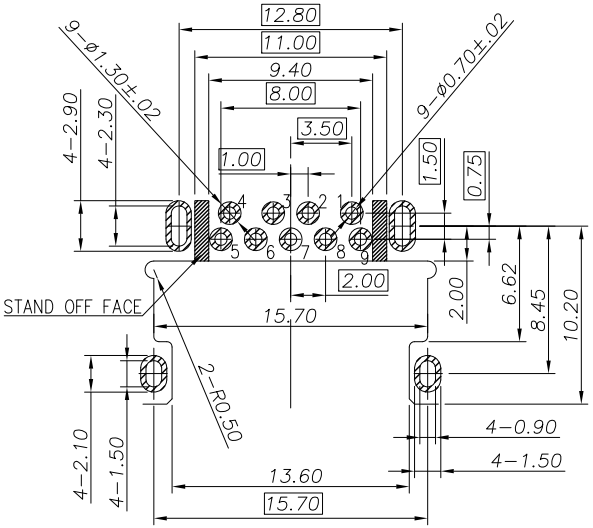

Recommended P.C.B Layout (THICKNESS=1.2mm)
(Component Side) TOLERANCE=±0.05

SPECIFICATIONS:

1. ELECTRICAL CHARACTERISTICS:
   1-1. CURRENT RATING: 1.8A (PIN1,4) ; OTHER CONTACTS 0.25A
   1-2. CONTACT RESISTANCE: 30mΩ MAX.
   1-3. DIELECTRIC WITHSTANDING VOLTAGE: 100V AC FOR 1 MINUTE
   1-4. INSULATION RESISTANCE: 100MΩ MIN.
2. MECHANICAL CHARACTERISTICS:
   2-1. INSERTION FORCE : 3.5 Kgf MAX.
   2-2. WITHDRAWAL FORCE : 1.0 Kgf(INITIAL),0.8Kgf(AFTER TEST)
3. DURABILITY: 5,000 CYCLES.
4. TO CONFORM TO SINGATRON HAZARDOUS SUBSTANCE FREE SPEC.
5. HALOGEN FREE PRODUCT IDENTIFICATION MARK ON JACK: ⊚
6. HALOGEN FREE PRODUCT IDENTIFICATION LABEL ON PACKAGING:
7. FOR IR-REFLOW LEAD-FREE PROCESS.
8. DATE : YYMMDD
9. PACKAGING : TAPE & REEL.

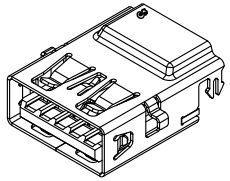

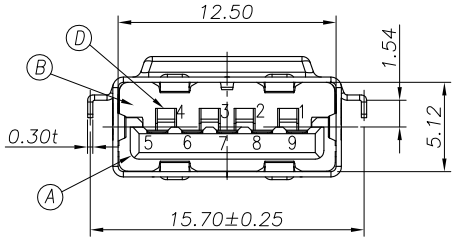

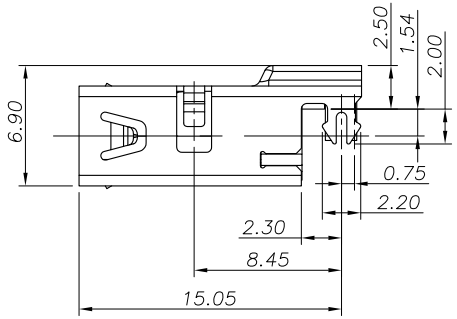

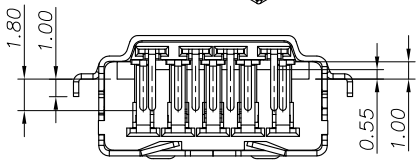

Pin Number	Signal ASSIGNMENT
PIN 1	VBUS
PIN 2	D-
PIN 3	D+
PIN 4	GND
PIN 5	StdA_SSRX-
PIN 6	StdA_SSRX+
PIN 7	GND_DRAIN
PIN 8	StdA_SSTX-
PIN 9	StdA_SSTX+

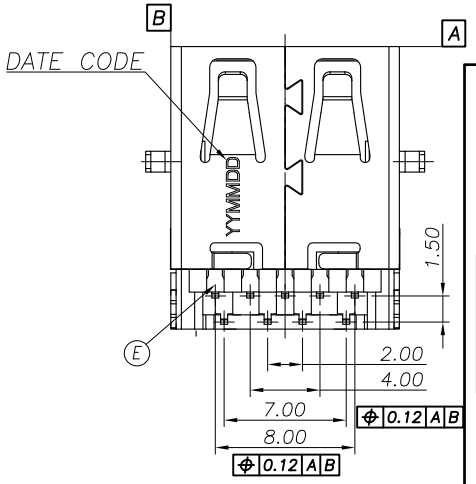

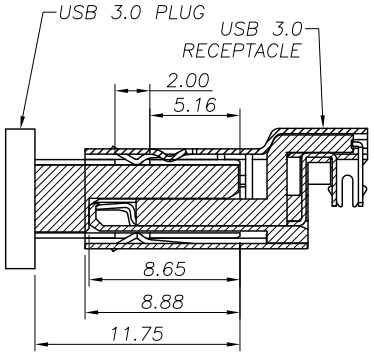

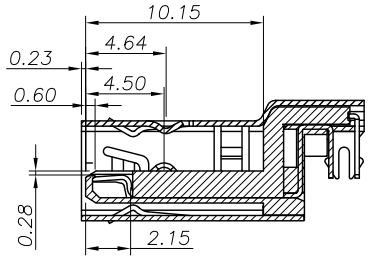

USB 3.0尺寸規範
SCALE 1:1

NO	DESCRIPTION	QTY	MATERIAL	PLATING & COLOR
E	TERMINAL	5	COOPER ALLOY	2u"Au OVER 30u"Pd/Ni PLATED ON MATING AREA, 120u" Sn PLATED ON SOLDERING 80u"NICKEL UNDER PLATING OVERALL
D	TERMINAL	4	COOPER ALLOY	
C	SHELL	1	STAINLESS STEEL	NICKEL 60u"MIN
B	BASE	1	HIGH THERMOPLASTIC	BLUE (300C)
A	HOUSING	1	HIGH THERMOPLASTIC	BLUE (300C)

UNLESS OTHERWISE SPECIFED TOLERANCES

DECIMALS:
X :±0.5
X.X :±0.3
X.XX :±0.2

ANGLES:
X :±2°
X.X :±1°

Singatron Enterprise Co., Ltd.
信音企業股份有限公司

TITLE	USB 3.0 REVERSE CONNECTOR		
DWN	ANDY	PART NO.2UB4029-000102F	
CHKD	CERRY	SCALE 1:1	UNIT: mm
APVD	MAX	SIZE: A3	SHEET:1 OF 1 REV: G

CUSTOMER COPY

文件編號 RD-06-043-A