REV.	ECN NO OR DESCRIPTION	REVISED	DATE
A	PRODUCT RELEASE	Victor	2012.04.16
B	ECN NO : T120127	Victor	2012.10.15

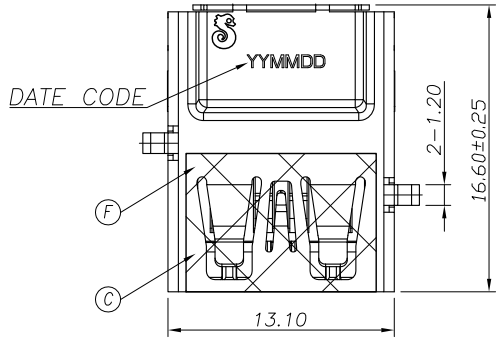

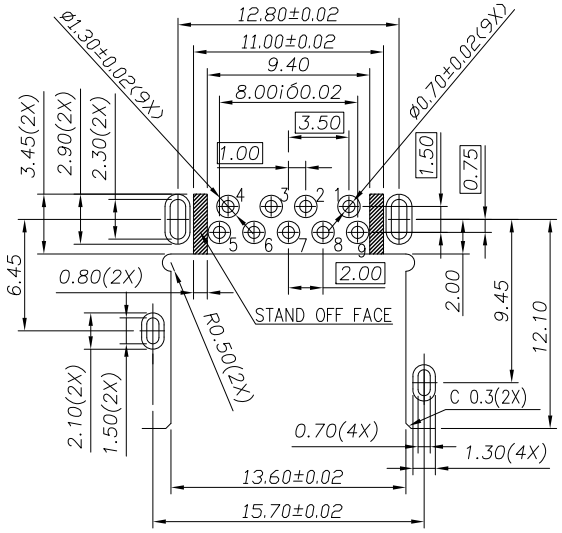

Recommended P.C.B Layout (THICKNESS=1.2mm)
(Component Side) TOLERANCE=±0.03

SPECIFICATIONS:

1. ELECTRICAL CHARACTERISTICS:
   1-1. CURRENT RATING: 1.8A (PIN1,4) ; OTHER CONTACTS 0.25A
   1-2. CONTACT RESISTANCE: 30mΩ MAX.
   1-3. DIELECTRIC WITHSTANDING VOLTAGE: 100V AC FOR 1 MINUTE
   1-4. INSULATION RESISTANCE: 100MΩ MIN
2. TO CONFORM TO SINGATRON HAZARDOUS SUBSTANCE FREE SPEC.
3. HALOGEN PRODUCT IDENTIFICATION MARK IN JACK: ◎
4. HALOGEN PRODUCT IDENTIFICATION LABEL ON PACKAGING:
5. FOR WAVE SOLDERING LEAD-FREE PROCESS.
6. DATE : YYMMDD
7. PACKAGING : TAPE & REEL.

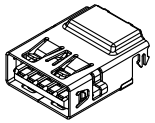

Pin Number	Signal ASSIGNMENT
PIN 1	VBUS
PIN 2	D-
PIN 3	D+
PIN 4	GND
PIN 5	StdA_SSRX-
PIN 6	StdA_SSRX+
PIN 7	GND_DRAIN
PIN 8	StdA_SSTX-
PIN 9	StdA_SSTX+

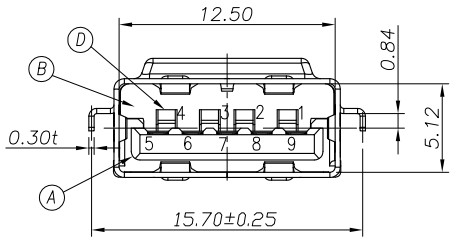

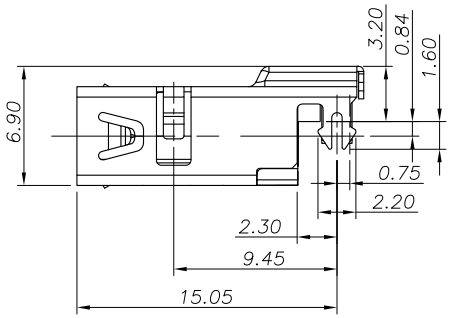

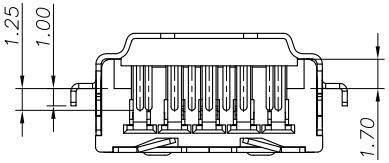

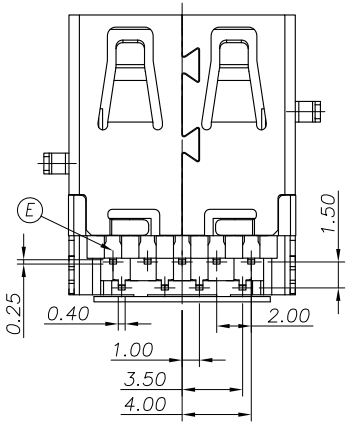

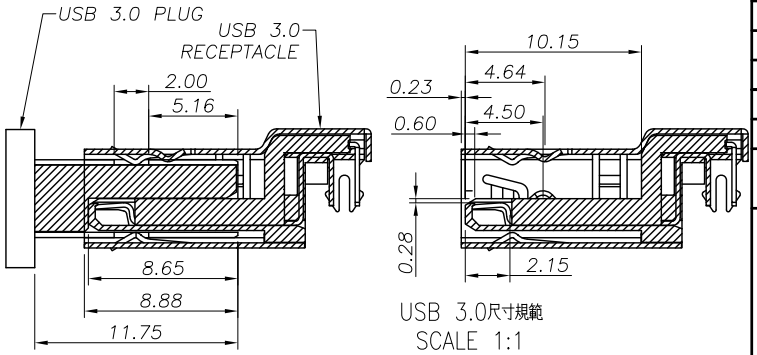

USB 3.0尺寸規範
SCALE 1:1

NO	DESCRIPTION	QTY	MATERIAL	PLATING & COLOR
F	MYLAR	1	KAPTON 11.0x8.0	YELLOW
E	TERMINAL	5	COOPER ALLOY	GOLD FLASH PLATED ON MATING AREA, Matt. Sn 100u"Min.PLATED ON SOLDERING 60u"NICKEL UNDER PLATING OVERALL
D	TERMINAL	4	COOPER ALLOY	
C	SHELL	1	STAINLESS STEEL	NICKEL 60u"MIN
B	BASE	1	HIGH THERMOPLASTIC	BLUE (300C)
A	HOUSING	1	HIGH THERMOPLASTIC	BLUE (300C)

UNLESS OTHERWISE SPECIFED TOLERANCES

DECIMALS: X :±0.5, X.X :±0.3, X.XX :±0.2

ANGLES: X :±2°, X.X :±1°

Singatron Enterprise Co., Ltd.
信音企業股份有限公司

TITLE	USB 3.0 REVERSE CONNECTOR		
DWN	VICTOR	PART NO.2UB4029-200301F	
CHKD		SCALE 1:1	UNIT: mm
APVD	ANGELA 2012.10.15	SIZE: A3	SHEET:1 OF 1 REV: B

CUSTOMER COPY

文件編號:RD-06-043-A