REV.	ECN NO OR DESCRIPTION	REVISED	DATE
A	PDR NO:T151109-4A	JAMES	2016.08.10

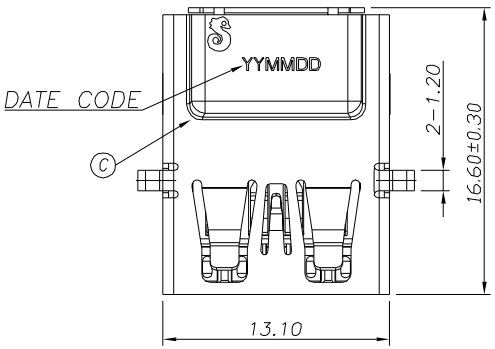

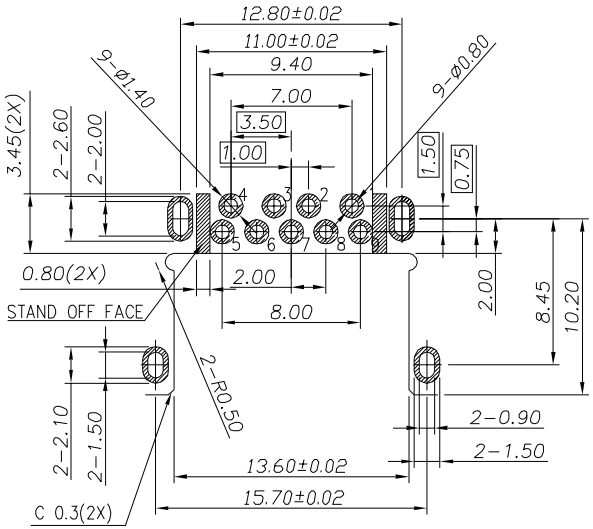

Recommended P.C.B Layout (THICKNESS=1.2mm)
(Component Side) TOLERANCE=±0.03 TOP VIEW

SPECIFICATIONS:

1. ELECTRICAL CHARACTERISTICS:
   1-1. CURRENT RATING: 1.8A (PIN1,4) ; OTHER CONTACTS 0.25A
   1-2. CONTACT RESISTANCE: 30mΩ MAX.
   1-3. DIELECTRIC WITHSTANDING VOLTAGE: 100V AC FOR 1 MINUTE
   1-4. INSULATION RESISTANCE: 100MΩ MIN
2. MECHANICAL CHARACTERISTICS:
   2-1. INSERTION FORCE : 3.5 Kgf MAX
   2-2. WITHDRAWAL FORCE : 1.0 Kgf MIN
3. DURABILITY: 5,000 CYCLES.
4. TO CONFORM TO SINGATRON HAZARDOUS SUBSTANCE FREE SPEC.
5. HALOGEN FREE IDENTIFICATION MARK ON JACK: ◎
6. HALOGEN FREE IDENTIFICATION LABEL ON PACKAGING:
7. FOR WAVE SOLDERING LEAD-FREE PROCESS.
8. DATE : YYMMDD
9. PACKAGING : TAPE & REEL.

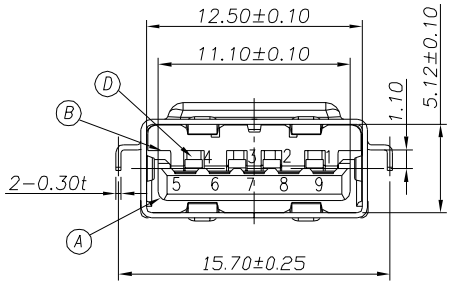

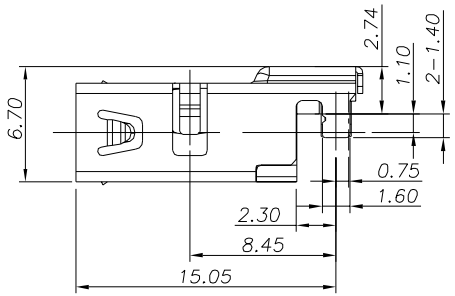

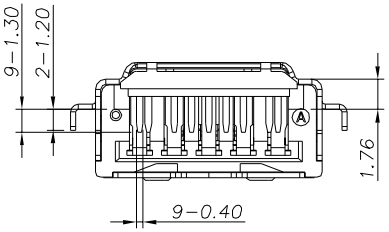

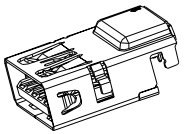

3D VIEW

Pin Number	Signal ASSIGNMENT
PIN 1	VBUS
PIN 2	D-
PIN 3	D+
PIN 4	GND
PIN 5	StdA_SSRX-
PIN 6	StdA_SSRX+
PIN 7	GND_DRAIN
PIN 8	StdA_SSTX-
PIN 9	StdA_SSTX+

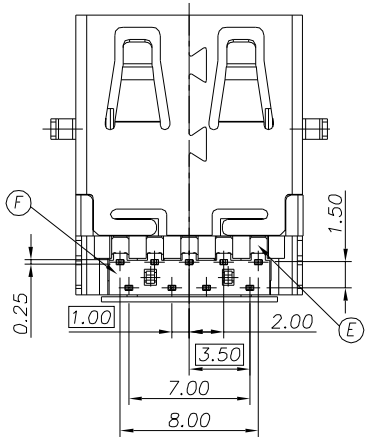

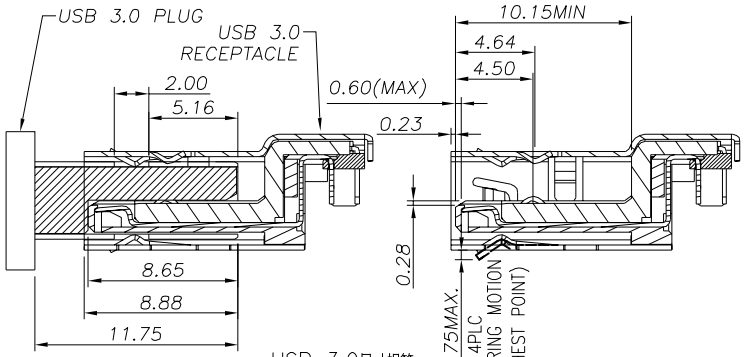

USB 3.0尺寸規範
SCALE 1:1

NO	DESCRIPTION	QTY	MATERIAL	PLATING & COLOR
F	HOUSING COVER	1	PA-9T+45%	BLACK
E	TERMINAL	5	C2680-H T=0.25	30u"Au PLATED ON MATING AREA, Matl. Sn 100u"Min.PLATED ON SOLDERING 80u"NICKEL UNDER PLATING OVERALL
D	TERMINAL	4	C5210-EH T=0.25	
C	SHELL	1	SUS304 1/2H T=0.30	NICKEL 60u"MIN
B	BASE	1	PA-9T+45%	BLACK
A	HOUSING	1	PA-9T+45%	BLACK

UNLESS OTHERWISE SPECIFED TOLERANCES

DECIMALS: X :±0.5, X.X :±0.3, X.XX :±0.2
ANGLES: X :±2°, X.X :±1°

Singatron Enterprise Co., Ltd.
信音企業股份有限公司

TITLE	USB 3.0 REVERSE CONNECTOR		
DWN	JAMES	PART NO.2UB4029-320101F	
CHKD		SCALE 1:1	UNIT: mm
APVD	BOYE	SIZE: A3	SHEET:1 OF 1 REV:A

CUSTOMER COPY

文件編號 RD-06-043-A