REV.	ECN NO OR DESCRIPTION	REVISED	DATE
A	PDR RELEASED	Jason	2012.11.20
B	ECN NO: S121223	Angus	2013.05.24

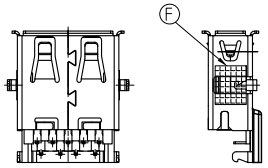

加貼MYLAR示意圖1:2

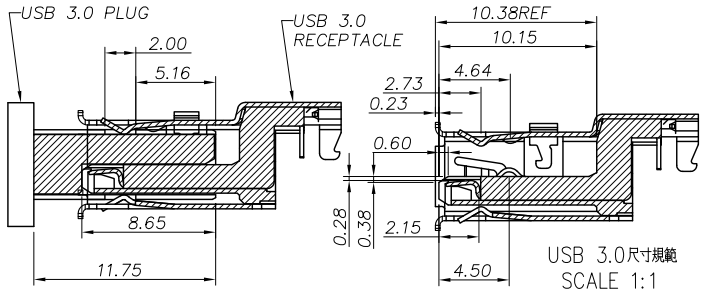

USB 3.0尺寸規範
SCALE 1:1

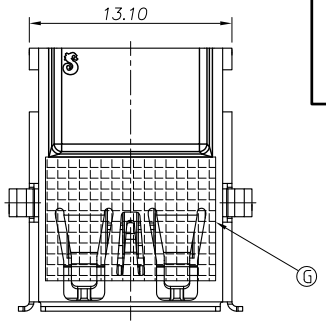

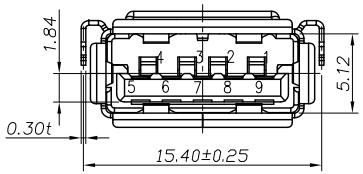

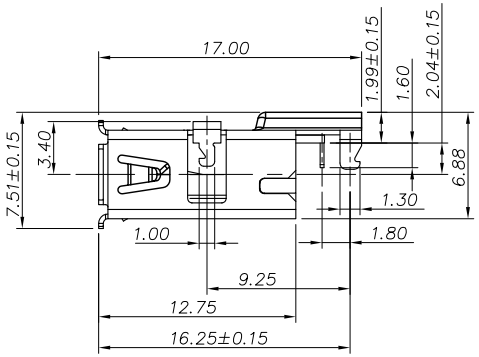

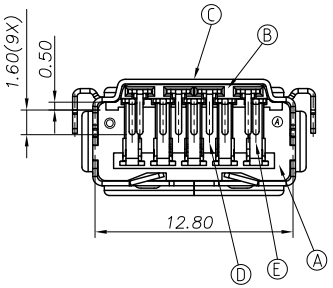

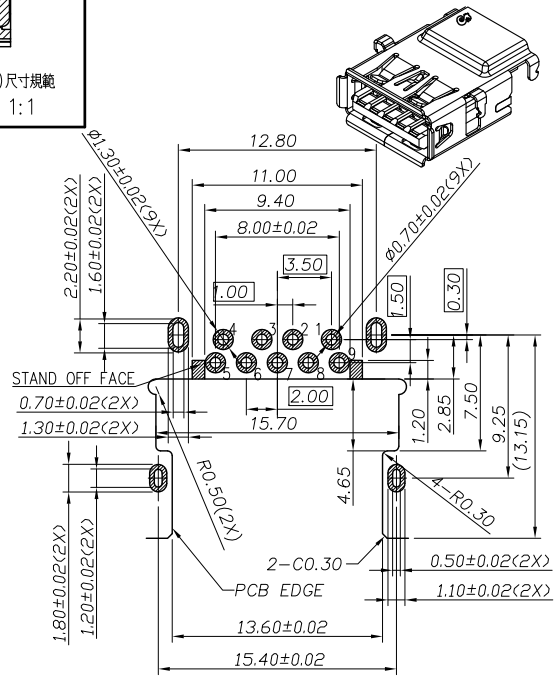

Recommended P.C.B Layout (THICKNESS=1.2mm)
(Component Side) TOLERANCE=±0.03

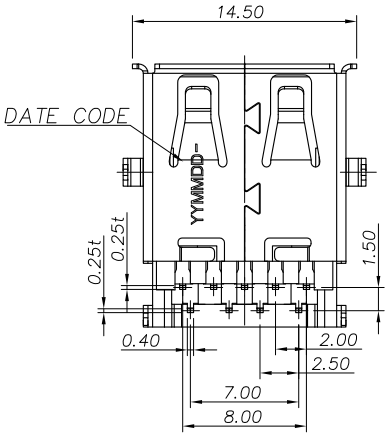

SPECIFICATIONS:

1. ELECTRICAL CHARACTERISTICS:
   1-1. CURRENT RATING: 1.8A (PIN1,4) ; OTHER CONTACTS 0.25A
   1-2. CONTACT RESISTANCE: 30mΩ MAX.
   1-3. DIELECTRIC WITHSTANDING VOLTAGE: 100V AC FOR 1 MINUTE
   1-4. INSULATION RESISTANCE: 100MΩMIN
2. MECHANICAL CHARACTERISTICS:
   2-1. INSERTION FORCE : 3.0 Kgf MAX
   2-2. WITHDRAWAL FORCE : 1.0 Kgf MIN(INITIAL),0.8 Kgf MIN(AFTER TEST)
3. DURABILITY: 5,000 CYCLES.
4. TO CONFORM TO SINGATRON HAZARDOUS SUBSTANCE FREE SPEC.
5. HALOGEN FREE PRODUCT IDENTIFICATION MARK ON JACK:
6. HALOGEN FREE PRODUCT IDENTIFICATION LABEL ON PACKAGING:
7. FOR IR REFLOW PROCESS.
8. DATE : YYMMDD
9. PACKAGING : TAPE & REEL.

Pin Number	Signal ASSIGNMENT
PIN 1	VBUS
PIN 2	D-
PIN 3	D+
PIN 4	GND
PIN 5	StdA_SSRX-
PIN 6	StdA_SSRX+
PIN 7	GND_DRAIN
PIN 8	StdA_SSTX-
PIN 9	StdA_SSTX+

NO	DESCRIPTION	QTY	MATERIAL	PLATING & COLOR
G	MYLAR	1	8mm*11mm	YELLOW
F	MYLAR	2	5mm*4mm	YELLOW
E	TERMINAL	5	COOPER ALLOY	SELECTIVE 30" GOLD/MATTE TIN
D	TERMINAL	4	COOPER ALLOY	
C	SHELL	1	STAINLESS STEEL	NICKEL 60u"MIN
B	BASE	1	HIGH THERMOPLASTIC	BLUE (300C)
A	HOUSING	1	HIGH THERMOPLASTIC	BLUE (300C)

UNLESS OTHERWISE SPECIFED TOLERANCES

DECIMALS: X :±0.5, X.X :±0.3, X.XX :±0.2

ANGLES: X :±2°, X.X :±1°

Singatron Enterprise Co., Ltd.
信音企業股份有限公司

TITLE	USB 3.0 REVERSE CONNECTOR			
DWN	Angus	PART NO. 2UB4034-000201F		
CHKD	Cerry	SCALE 1:1	UNIT: mm	
APVD	Max	SIZE: A3	SHEET:1 OF 1	REV: B

CUSTOMER COPY

文件編號:RD-06-043-A