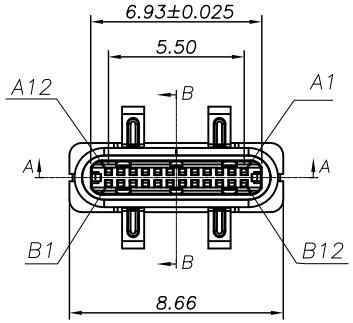

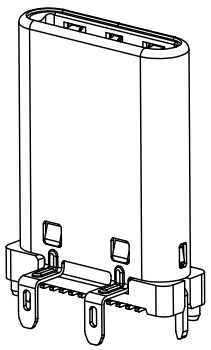

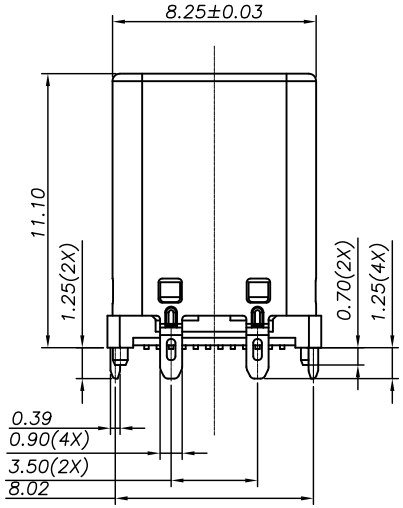

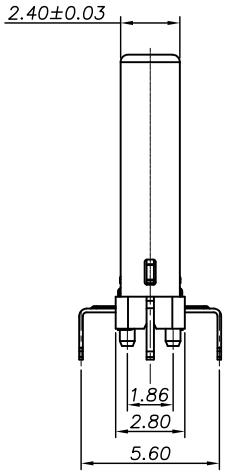

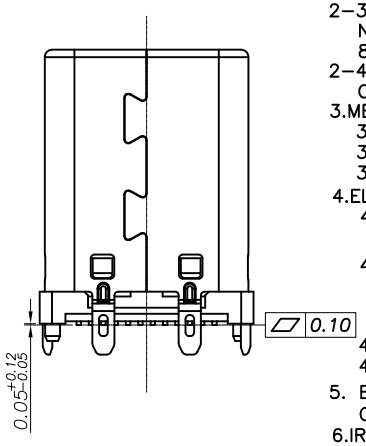

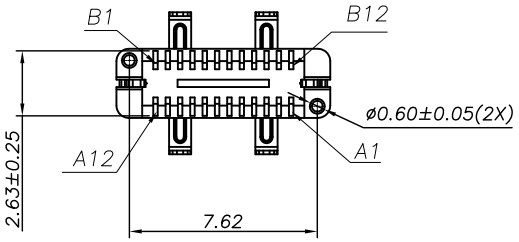

NOTE:
1.MATERIAL SPECIFICATION:
1.HOUSING&PICKUP COVER:LCP,UL94 V−0.
2.CONTACTS: COPPER ALLOY(C7025)
3.LATCH: STAINLESS STEEL(SUS301)
4.SPRING: STAINLESS STEEL(SUS304)
4.FRONT SHELL: STAINLESS STEEL(SUS304)
2.PLATING SPECIFICATION:
2−1.CONTACTS:
Ni 50u" MIN. UNDER PLATED OVER ALL.
Au PLATED ON THE FUNCTIONAL AREA OF CONTACT.
(GOLD PLATING THICKNESS FOLLOW THE P/N)
PLATING SPECIFICATIONS OF THE SOLDER AREA FOLLOW THE P/N
2−2.FRONT SHELL:
Ni 30u" MIN. UNDER PLATED OVER ALL.
2−3.LATCH:
Ni 50u" MIN. UNDER PLATED OVER ALL.
80u" MIN. TIN PLATED ON SOLDER AREA.
2−4.SPRING:
CLEAR ONLY
3.MECHANICAL PERFORMANCE,
3−1.INSERTION FORCE: 0.5~2.0kgf.
3−2.REMOVAL FORCE: 0.8kgf~2.0kgf.
3−3.DURABILITY: 10000 CYCLES.
4.ELECTRICAL PERFORMANCE,
4−1. CURRENT RATING:3.0A
VOLTAGE RATING:5.0V
4−2. LLCR:
VBUS & GND PINS AND OTHER PINS: 40mΩ/PIN MAX.
SHIELD: 50mΩ/MAX.
LLCR MAX. CHANGE OF ALL PINS: 10mΩ.
4−3.INSULATION RESISTANCE: 100MΩ MIN
4−4.DIELECTRIC WITHSTAND VOLTAGE,AC 100V FOR 1 MINUTE.
5. ENVIRONMENTAL PERFORMANCE:
OPERATING TEMPERATURE: −25°C~+85°C.
6.IR REFLOW:
THE PEAK TEMPERATURE ON THE BOARD SHALL
BE MAINTAINED FOR 10 SECONDS AT 260°C.

TABLE 1

ITEM	P/N	HOUSING COLOR	CONTACTS	
			FUNCTIONAL AREA	SOLDER AREA
1	2UC−TC24P129	BLACK	Au:1u"	Sn 80u"

DIMENSIONS
TOLERANCE
METRIC
X :±0.3
X.X :±0.25
X.XX :±0.2
X.XXX :±0.05
ANGLES
X :±1°
X.X :±0.5°

Singatron Enterprise Co., Ltd.

TITLE	USB TYPE C PLUG 24PIN 直立式SMT 四支脚 (L=11.1MM)			
DWN		PART NO. 2UC−TC24P129		
CHKD	2023/03/28	SCALE 1:1	UNIT: mm	
APVD		SIZE: A3	SHEET:1 OF 3	REV: A

CUSTOMER COPY

文件編號 RD−06−043−A

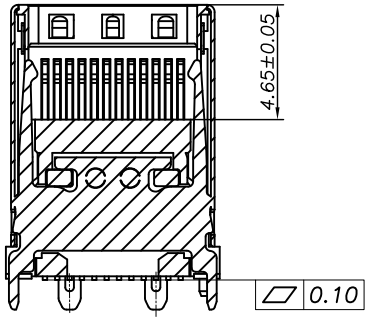

SECTION:A–A

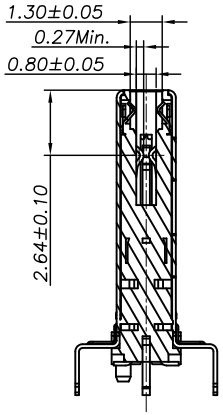

SECTION:B–B

USB TYPE–C PIN ASSIGNMENTS

PIN NUMBER	SIGNAL NAME	PIN NUMBER	SIGNAL NAME
A1	GND	B12	GND
A2	SSTXp1	B11	SSRXp1
A3	SSTXn1	B10	SSRXn1
A4	VBUS	B9	VBUS
A5	CC1	B8	SBU2
A6	Dp1	B7	Dn2
A7	Dn1	B6	Dp2
A8	SBU1	B5	CC2
A9	VBUS	B4	VBUS
A10	SSRXn2	B3	SSTXn2
A11	SSRXp2	B2	SSTXp2
A12	GND	B1	GND

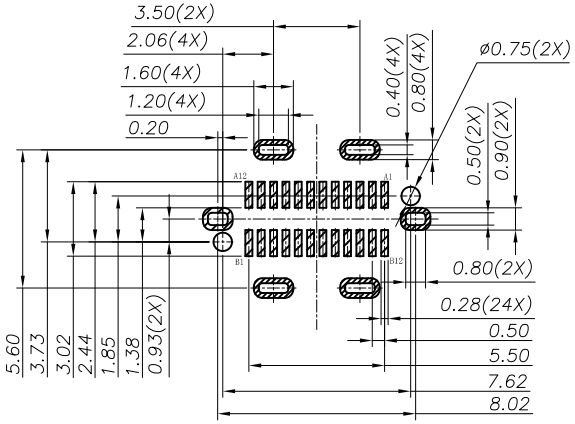

RECOMMENDED PCB LAYOUT(TOP VIEW)

THICKNESS 0.8±0.10MM;DEFAULT TOLERANCE:±0.05

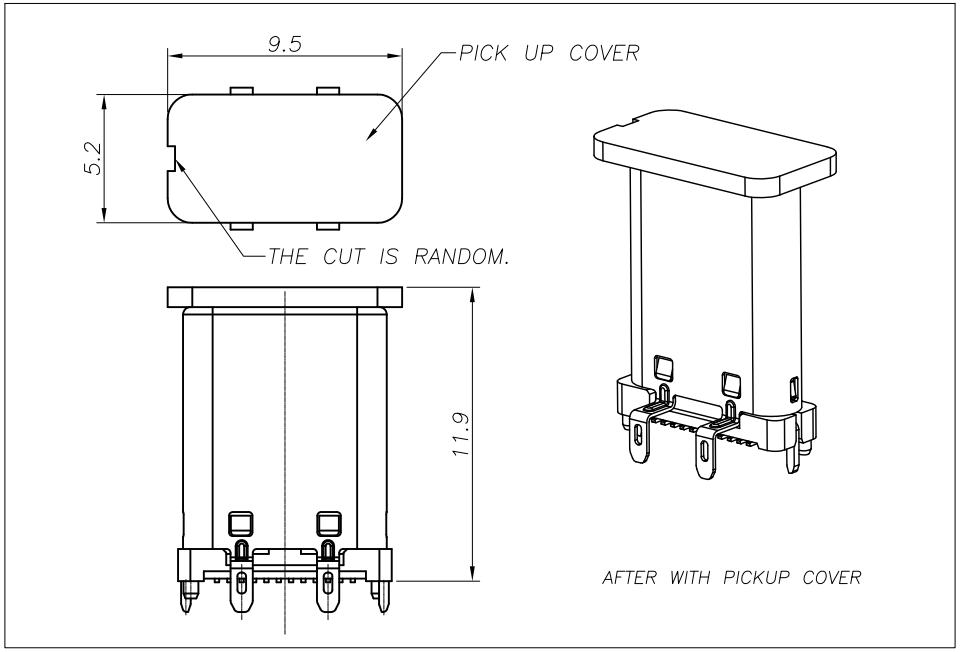

DIMENSIONS
TOLERANCE
METRIC

X :±0.3
X.X :±0.25
X.XX :±0.2
X.XXX :±0.05
ANGLES
X :±1°
X.X :±0.5°

Singatron Enterprise Co., Ltd.				
TITLE	USB TYPE C PLUG 24PIN 直立式SMT 四支脚 (L=11.1MM)			
DWN		PART NO. 2UC–TC24P129		
CHKD	2023/03/28	SCALE 1:1	UNIT: mm	
APVD		SIZE: A3	SHEET:2 OF 3	REV: A

CUSTOMER COPY

文件編號 RD–06–043–A

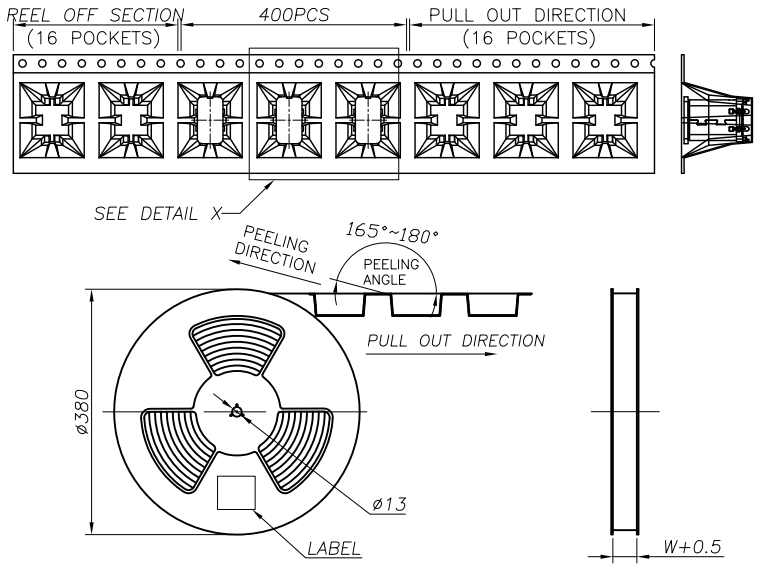

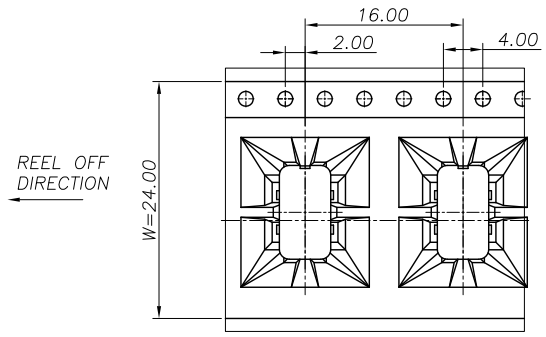

DETAIL X
SCALE 2:1

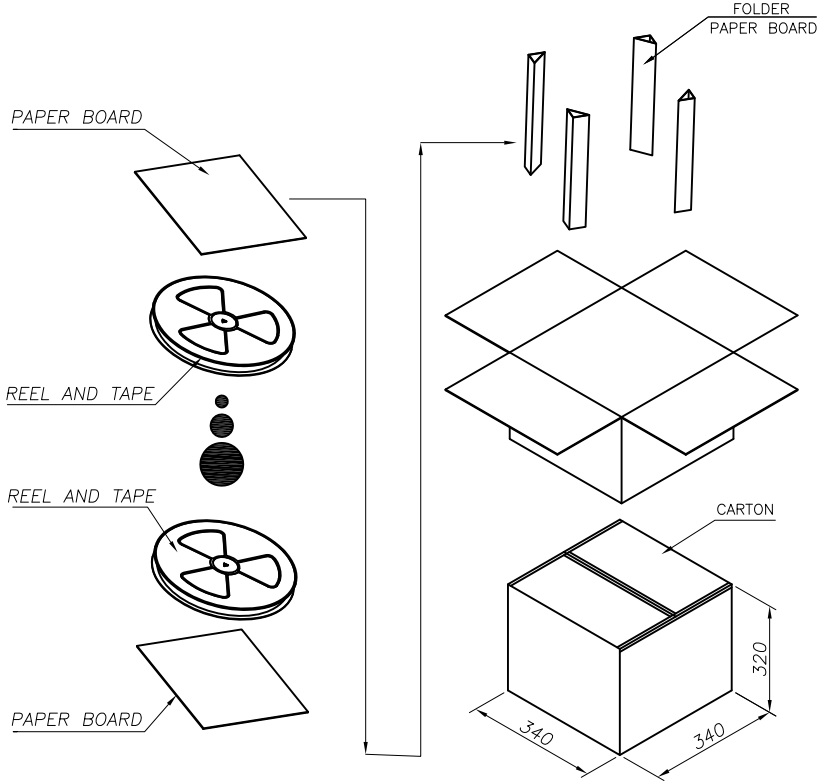

	REEL/TRAY	CARTON
CONNECTOR (PCS)	400	4000

DIMENSIONS
TOLERANCE
METRIC

X :±0.3
X.X :±0.25
X.XX :±0.2
X.XXX :±0.05
ANGLES
X :±1°
X.X :±0.5°

Singatron Enterprise Co., Ltd.				
TITLE	USB TYPE C PLUG 24PIN 直立式SMT 四支脚 (L=11.1MM)			
DWN		PART NO. 2UC-TC24P129		
CHKD	2023/03/28	SCALE 1:1	UNIT: mm	
APVD		SIZE: A3	SHEET:3 OF 3	REV: A
CUSTOMER COPY				

文件編號 RD-06-043-A