REV.	ECN NO OR DESCRIPTION	REVISED	DATE
A	PRODUCT RELEASE	Ye wei	2023.10.23

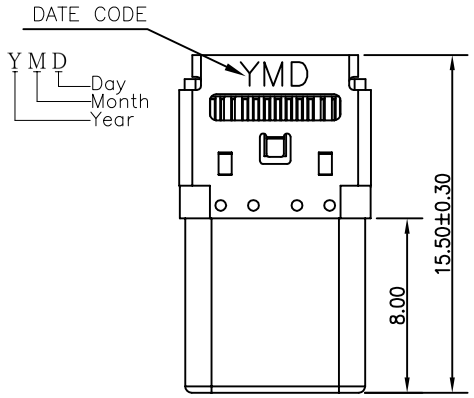

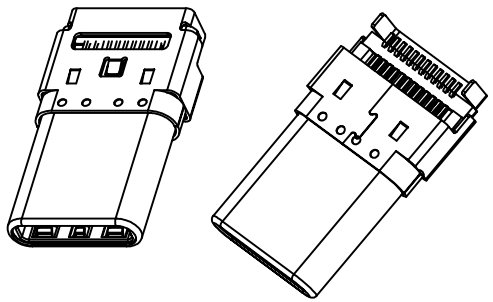

3D VIEW

SPECIFICATIONS:

1. ELECTRICAL CHARACTERISTICS:
   - 1-1. CURRENT RATING: 5A FOR VBUS,1.25A FOR GND PIN,0.25A FOR OTHER PIN.
   - 1-2. CONTACT RESISTANCE:40mΩ MAX.
   - 1-3. INSULATION RESISTANCE: 100 MEGAOHMS MIN. BY 100V DC.
   - 1-4. DIELECTRIC WITHSTANDING VOLTAGE: 100V AC FOR 1 MINUTE.
2. MECHANICAL CHARACTERISTICS:
   - 2-1. INSERTION FORCE: 5~20N
   - 2-2. WITHDRAWAL FORCE: 8N~20N(INITIAL); 6~20N(AFTER LIFE TEST)
3. LIFE TEST: 10,000 CYCLES
4. OTHER GENERAL SPEC. TO REFER "2UP2Y25-C00321F SPEC".
5. TO CONFORM TO SINGATRON HAZARDOUS SUBSTANCE FREE SPEC.
6. SALT SPRAY :48H
7. HALOGEN FREE PRODUCT IDENTIFICATION LABEL ON PACKAGING:
8. OPERATING TEMPERATURE:-30°to+85°.

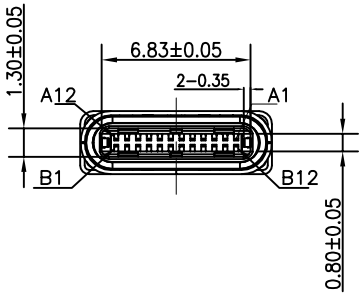

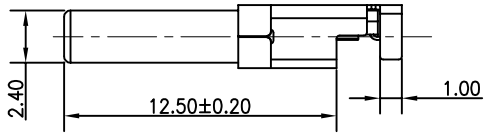

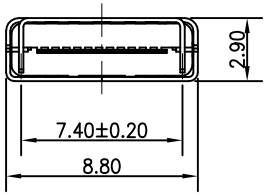

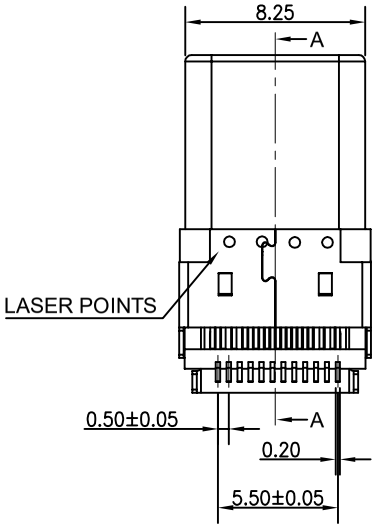

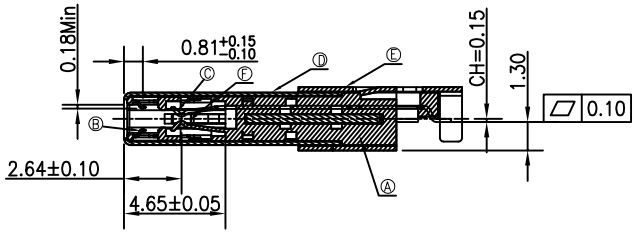

SECTION: A-A

NO.	DESCRIPTION	QTY	MATERIAL	PLATING & COLOR
G	CAP	1	HIGH TEMPERATURE PLASTIC UL94V-0	BLACK
F	LATCH	1	STAINLESS STEEL	
E	SHIELD	1	STAINLESS STEEL	BRIGHT NICKEL PLATING
D	SHELL	1	STAINLESS STEEL	BRIGHT NICKEL PLATING
C	CONTACT	24	COPPER ALLOY	Au 3u" MIN ON CONTACT AREA MATTE TIN ON SOLDER AREA NICKEL UNDER PLATING OVER ALL
B	EMC SPRING	2	STAINLESS STEEL	
A	HOUSING	4	HIGH TEMPERATURE PLASTIC UL94V-0	BLACK

UNLESS OTHERWISE SPECIFIED TOLERANCES

DECIMALS: X :±0.5, X.X :±0.3, X.XX :±0.2

ANGLES: X :±2°, X.X :±1°

Singatron Enterprise Co., Ltd.
信音企業股份有限公司

TITLE	U.S.B TYPE C PLUG SMT MIDDLE MOUNT RIGHT ANGLE L=15.5MM			
DWN	Ye wei	PART NO.: 2UP2Y25-C00321F		
CHKD	Jim-deng	SCALE 1:1	UNIT: mm	
APVD	Jim-deng	SIZE: A3	SHEET: 1OF2	REV: A

CUSTOMER COPY

文件編號:RD-06-043-A

REV.	ECN NO OR DESCRIPTION	REVISED	DATE
A	PRODUCT RELEASE	Ye wei	2023.10.23

Schematic Diagram of Dimensions with Cap

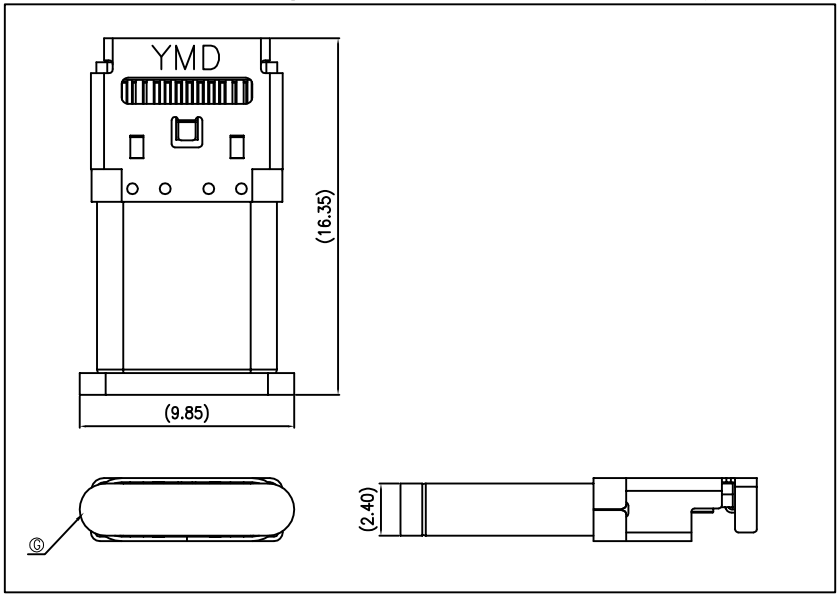

USB TYPE-C PIN ASSIGNMENTS

PIN NUMBER	SIGNAL NAME	PIN NUMBER	SIGNAL NAME
A1	GND	B12	GND
A2	SSTXp1	B11	SSRXp1
A3	SSTXn1	B10	SSRXn1
A4	VBUS	B9	VBUS
A5	CC1	B8	SBU2
A6	Dp1	B7	Dn2
A7	Dn1	B6	Dp2
A8	SBU1	B5	CC2
A9	VBUS	B4	VBUS
A10	SSRXn2	B3	SSTXn2
A11	SSRXp2	B2	SSTXp2
A12	GND	B1	GND

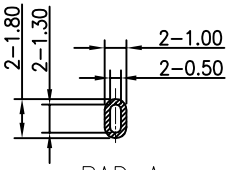

PAD A

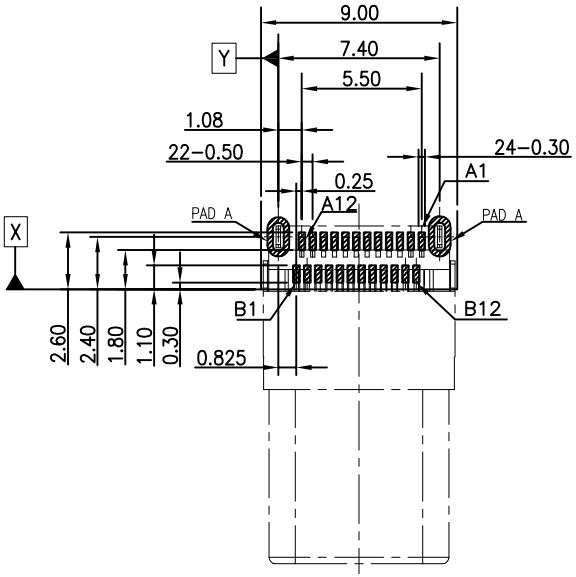

RECOMMENDED P.C.B. LAYOUT
T=0.80 OR 1.00mm
TOLERANCE UNSPECIFIED ±0.05mm

UNLESS OTHERWISE SPECIFIED TOLERANCES				
DECIMALS: X :±0.5, X.X :±0.3, X.XX :±0.2	ANGLES: X :±2°, X.X :±1°	Singatron Enterprise Co., Ltd. 信音企業股份有限公司		
		TITLE	U.S.B TYPE C PLUG SMT MIDDLE MOUNT RIGHT ANGLE L=15.5MM	
		DWN	Ye wei	PART NO.: 2UP2Y25-C00321F
		CHKD	Jim-deng	SCALE 1:1 / UNIT: mm
		APVD	Jim-deng	SIZE: A3 / SHEET: 2OF2 / REV: A
		CUSTOMER COPY		

文件編號:RD-06-043-A