REV	ECN NO.	DESCRIPTION	DATE	DRAWN
A/1	N/A	Modify packing	11/16/16'	Cong Wang
A/2	N/A	Add finish(GO & G*)	03/14/17'	Ziwen Kong
A/3	N/A	Add 1x02 pin and cover color(black)	03/21/17'	Ziwen Kong

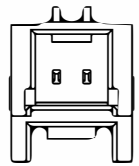

1x02

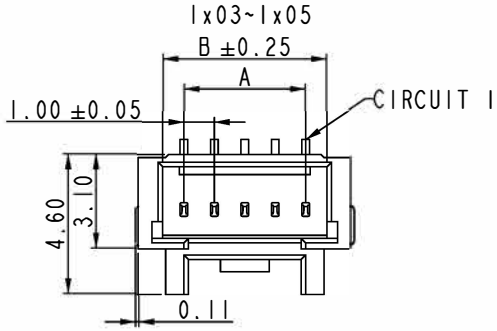

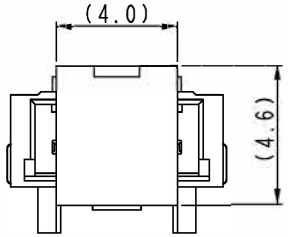

PICK AND PLACE AREA
WITH COVER

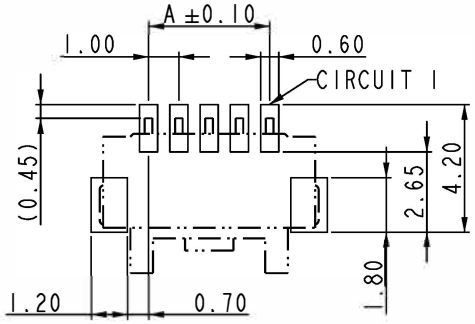

TOLERANCE: ±0.05
RECOMMENDED P.C.B. Layout
TOP VIEW

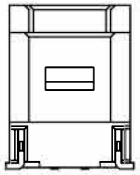

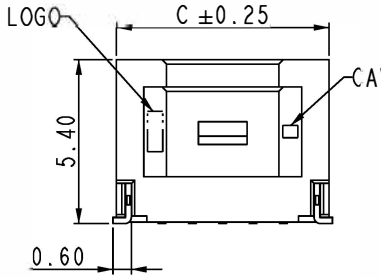

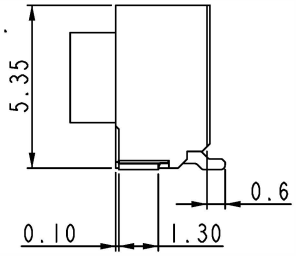

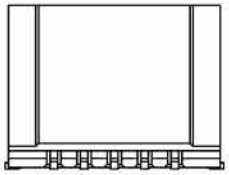

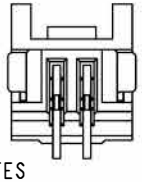

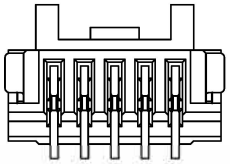

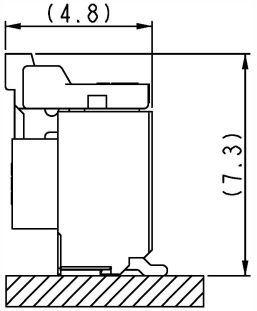

Mating Condition (REF.)

NOTES
1. MATERIAL
   INSULATION(HALOGEN FREE): NYLON 9T, UL94V-0; COLOR: SEE NOTE 4
   COVER(HALOGEN FREE): NYLON 9T, UL94V-0; COLOR: FOLLOW INSULATION COLOR
   CONTACT:COPPER ALLOY, t=0.25
   SOLDER TAB:COPPER ALLOY, t=0.20 / MATTE-TIN PLATED OVER NICKEL
2. CONTACT FINISH:
   (VOID): MATTE-TIN PLATED OVER NICKEL
   GO: GOLD FLASH PLATED ON CONTACT AREA, OVER NICKEL
   G*: *u"min. GOLD PLATED ON CONTACT AREA, OVER NICKEL
3. MATES WITH:2WB1006 SERIES HOUSIG
4. ORDERING CODE: 2WB 1006WNV-1XNPSKX-X-NL-C-A

NO. OF PINS
1 x03- 3 PINS
1x04--4 PINS
1x05--5 PINS

SMT WITH LATCH TYPE

SEE CONTACT FINISH

(VOID): CREAM
CI: BLACK

HALOGEN FREE

WITH COVER

TAPE REEL PACKING

PIN	DIM. (mm)		
	A	B	C
1x02	1.00	2.40	4.00
1x03	2.00	3.40	5.00
1x04	3.00	4.40	6.00
1x05	4.00	5.40	7.00

TOLERANCE
X.X ±0.25
X.XX ±0.15
ANGULA 3°
UNLESS OTHERWISE SPECIFIED

Singatron Enterprise Co., Ltd.				
TITLE	WIRE TO BOARD, PITCH 1.00 mm, VERTICAL, SMT TYPE, ASSEMBLY			
DWN	Ziwen Kong	PART NO. 2WB1006WNV-1XNPSK-X-X-NL-C-A		
CHKD	Paul Chen	SCALE 1:1	UNIT: mm	
APVD	Wayne Lai	SIZE: A3	SHEET 1 OF 3	REV: A/3
CUSTOMER COPY				

文件編號 RD-06-043-A

REV	ECN NO.	DESCRIPTION	DATE	DRAWN
A/1	N/A	Modify packing	11/16/16'	Cong Wang
A/2	N/A	Add finish(GO & G*)	03/14/17'	Ziwen Kong
A/3	N/A	Add 1x02 pin and cover color(black)	03/21/17'	Ziwen Kong

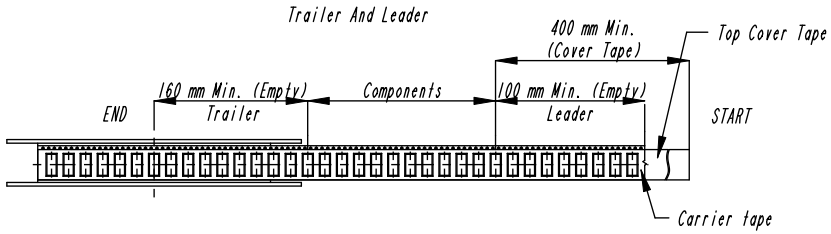

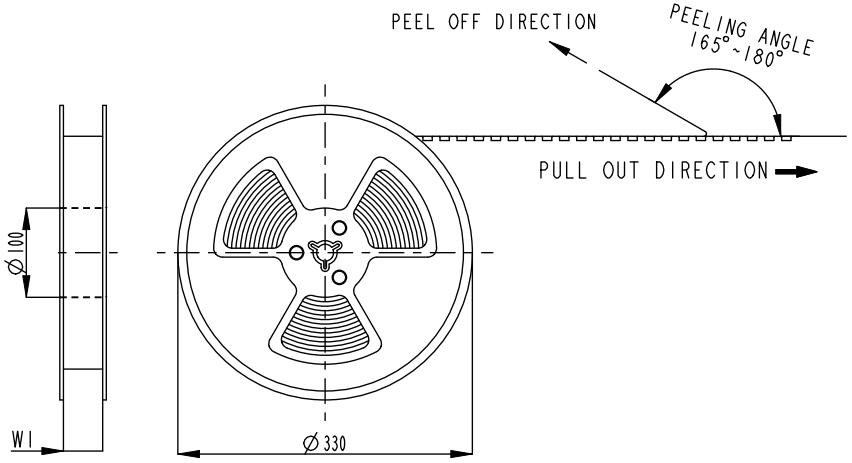

1x03, 1x05

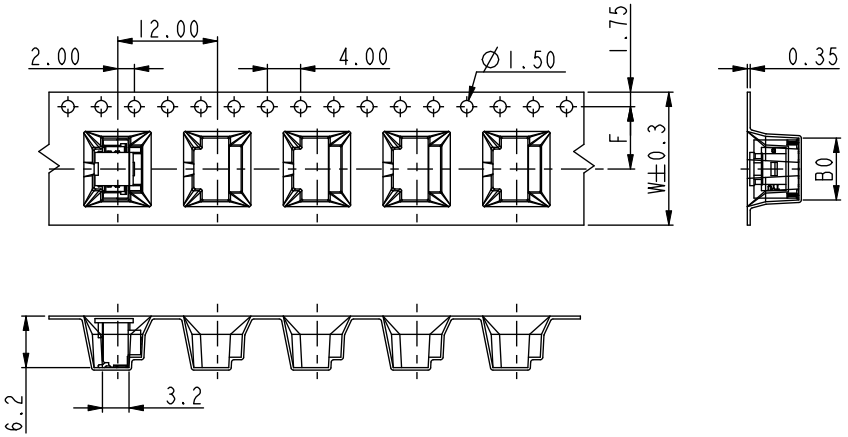

1x02

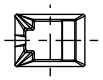

1x04

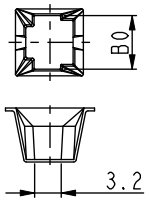

PIN	DIM. (mm)			
	B0	F	W	W1
1x02	4.5	7.5	16.0	16.5
1x03	5.5			
1x04	6.5			
1x05	7 5			

1. 10 SPROCKET HOLE PITCH CUMULATIVE TOLERANCE ±0.20
2. CARRIER CAMBER IS WITHIN 1 mm IN 250 mm
3. THE TOTAL TEARING CONTROL RANGE OF TOP COVER TAPE IS 10~130g, REFERENCE SPEC: EIA-481-D
4. PEELING SPEED: 300mm/MINUTES, REFERENCE SPEC: EIA-481-D
5. MATERIAL: TRANSPARENT CONDUCTIVE POLYSTYRENE ALLOY.(UP-5000)
6. ALL DIMENSIONS MEET EIA-481-D REQUIREMENTS
7. THICKNESS : 0.35±0.05mm
8. COMPONENT LOAD PER 13" REEL : 800 PCS

TOLERANCE
X.X ±0.25
X.XX ±0.15
ANGULA 3°
UNLESS OTHERWISE SPECIFIED

Singatron Enterprise Co., Ltd.				
TITLE	WIRE TO BOARD, PITCH 1.00 mm, VERTICAL, SMT TYPE, ASSEMBLY			
DWN	Ziwen Kong	PART NO. 2WB1006WNV-1XNPSK-X-X-NL-C-A		
CHKD	Paul Chen	SCALE 1:1	UNIT: mm	
APVD	Wayne Lai	SIZE: A3	SHEET 2 OF 3	REV: A/3

CUSTOMER COPY

文件編號 RD-06-043-A

REV	ECN NO.	DESCRIPTION	DATE	DRAWN
A/1	N/A	Modify packing	11/16/16'	Cong Wang
A/2	N/A	Add finish(GO & G*)	03/14/17'	Ziwen Kong
A/3	N/A	Add 1x02 pin and cover color(black)	03/21/17'	Ziwen Kong

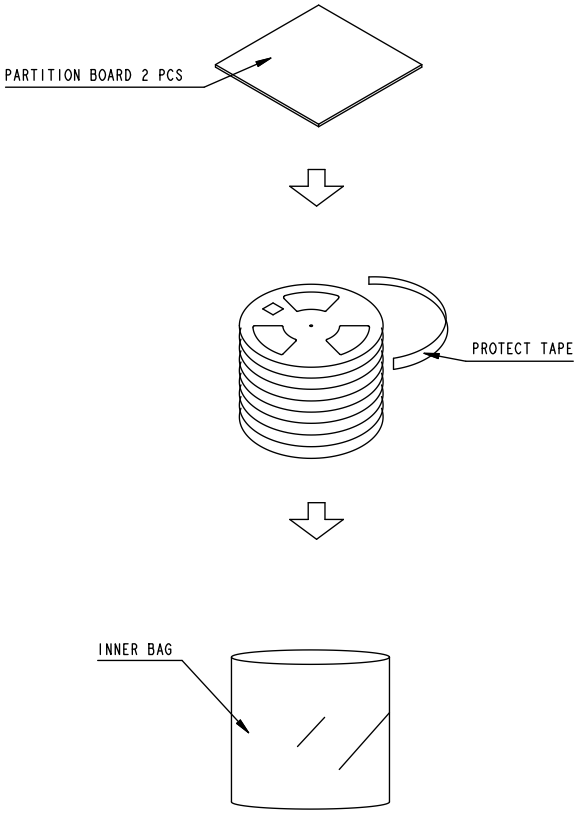

PACKING MATERIAL		PACKING CAPACITY			
PART NAME	DIM.(mm)	PIN	PCS/RE	RE/BC	PCS/BC
REEL	∅330*(W+0.5)	1x02~1x05	800	12	9,600
CARTON	350*350*340				

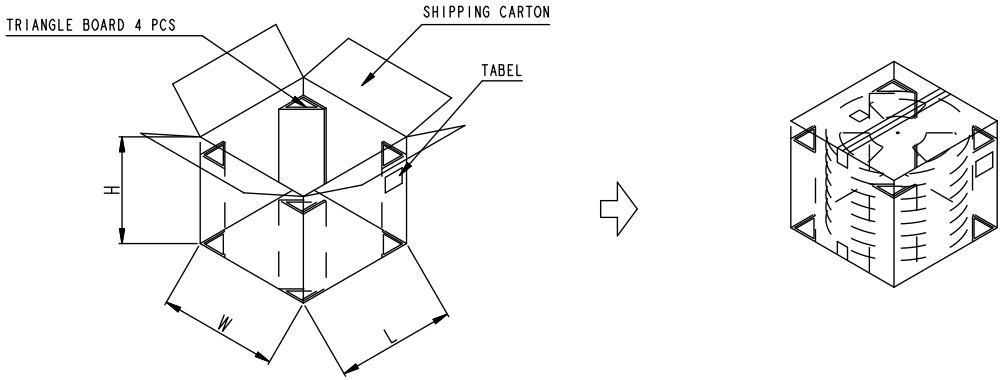

TOLERANCE
X.X ±0.25
X.XX ±0.15
ANGULA 3°
UNLESS OTHERWISE SPECIFIED

Singatron Enterprise Co., Ltd.				
TITLE	WIRE TO BOARD, PITCH 1.00 mm, VERTICAL, SMT TYPE, ASSEMBLY			
DWN	Ziwen Kong	PART NO. 2WB1006WNV-1XNPSK-X-X-NL-C-A		
CHKD	Paul Chen	SCALE 1:1	UNIT: mm	
APVD	Wayne Lai	SIZE: A3	SHEET 3 OF 3	REV: A/3

CUSTOMER COPY

文件編號 RD-06-043-A