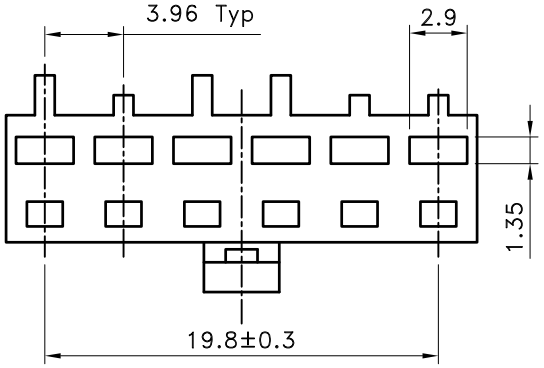

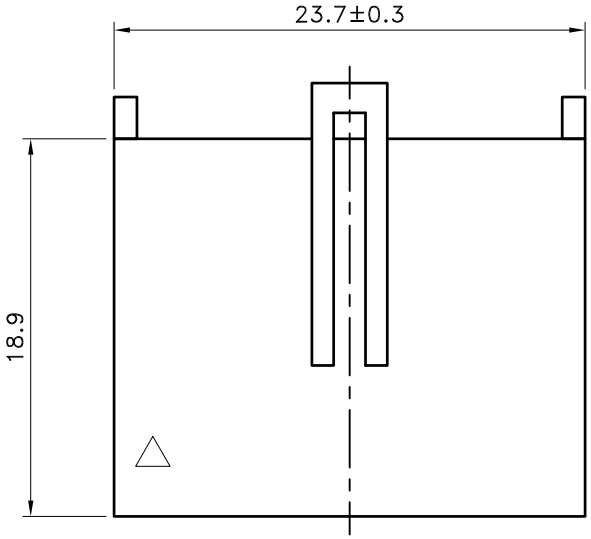

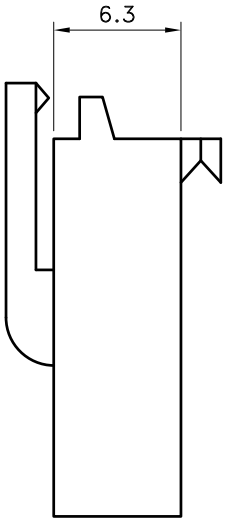

■ SPECIFICATIONS

- Voltage Rating : 250 V AC/DC
- Current Rating : 4A AC/DC
- Withstanding Voltage : 1,500V AC/minute
- Insulation Resistance : 500MΩ min
- Temperature Range : - 40℃ to +85℃
- Contact Resistance : 10mΩ max

■ HOUSING

- Part No. : 2WB1138-06
- Poles : 6
- Material : Nylon 66 UL94V-2
- Q' ty : 1,000 pcs./Bag

TOLERANCE		LTR	REVISION RECORD	DATE	LTR	REVISION RECORD	DATE
.0	±0.3	ECR	RoHS Compliant	07/01/05			
.00	±0.2	ECR	200708-008	08/08/15			
.000	±0.1						
ALL	±				CUSTOMER		
ANGLE							
0°	±				Conforms to The RoHS Instruction		
.0°	±						

Singatron Enterprise Co., Ltd.

TITLE	3.96mm Crimp Style Connectors Housing			
DWN	黃科源	PART NO. 2WB1138-06		
CHKD	林宗	SCALE 1:1	UNIT: mm	
APVD	林宗	SIZE: A3	SHEET:1 OF 1	REV: a2

CUSTOMER COPY

文件編號 RD-06-043-A