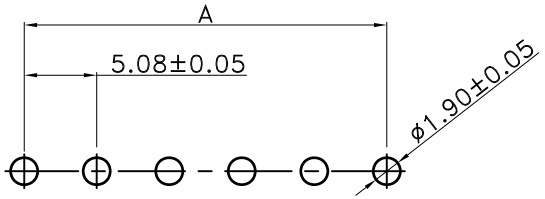

Recommand PCB Layout

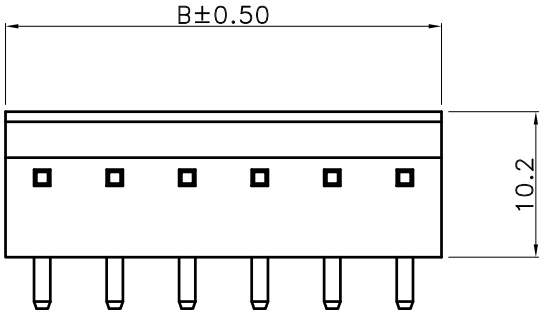

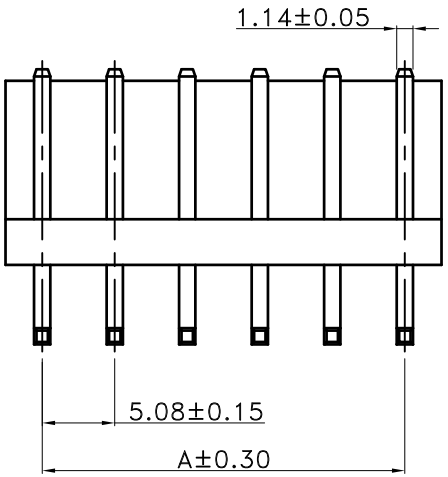

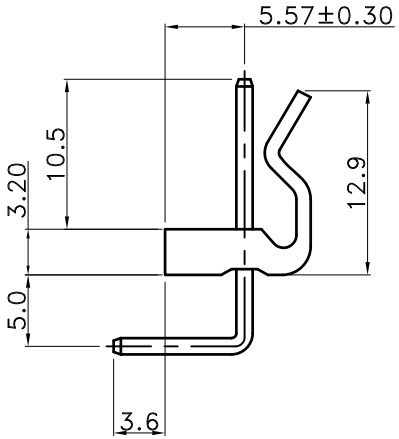

■ SPECIFICATIONS

- Current rating : 7A AC/DC
- Withstanding voltage : 1,500V AC/minute
- Insulation resistance : 1,000MΩ min.
- Temperature range : - 25℃ to + 85℃
- Contact resistance : 20mΩ max.

■ WAFER

- Part No. : 2WB5081R-XX
- Poles : 02~10
- RoHS Compliant 2002/95/EC
- Material : Contact : Brass, Tin or Gold Plated
  Base : Nylon 66 UL94V-2
- Mating Housing : 2WB5080-XX
- Q' ty : 1,000 pcs./Bag

Poles	Part No.	Dimensions(mm)	
		A	B
2	2WB5081R-02	5.08	10.22
3	2WB5081R-03	10.16	15.30
4	2WB5081R-04	15.24	20.38
5	2WB5081R-05	20.32	25.46
6	2WB5081R-06	25.40	30.54
7	2WB5081R-07	30.48	35.62
8	2WB5081R-08	35.56	40.70
9	2WB5081R-09	40.64	45.78
10	2WB5081R-10	45.72	50.86

TOLERANCE		LTR	REVISION RECORD	DATE	LTR	REVISION RECORD	DATE
.0	±0.3	ECR	201004-002	10/04/12			
.00	±0.2						
.000	±0.1						
ALL	±						
ANGLE					CUSTOMER		
0°	±						
.0°	±				Conforms to The RoHS Instruction		

Singatron Enterprise Co., Ltd.

TITLE	5.08mm Crimp Style Connectors Wafer			
DWN	張逸維	PART NO.	2WB5081R-XX	
CHKD	黃科源	SCALE 1:1	UNIT: mm	
APVD	張育瑞	SIZE: A3	SHEET:1 OF 1	REV:a2

CUSTOMER COPY

文件編號 RD-06-043-A