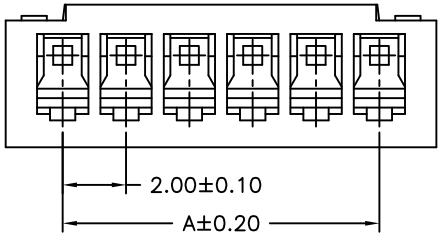

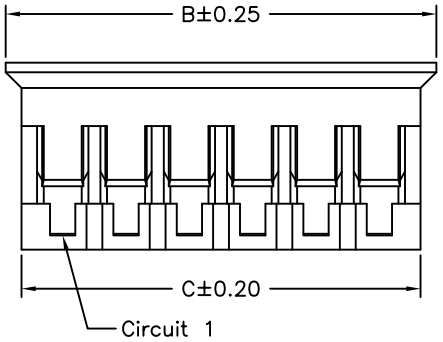

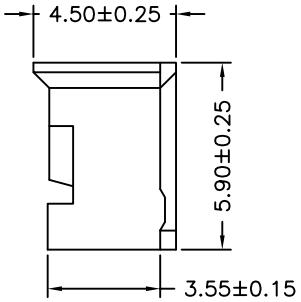

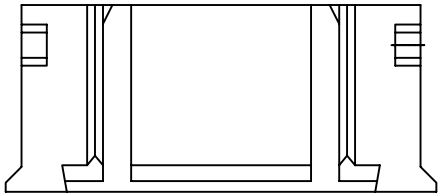

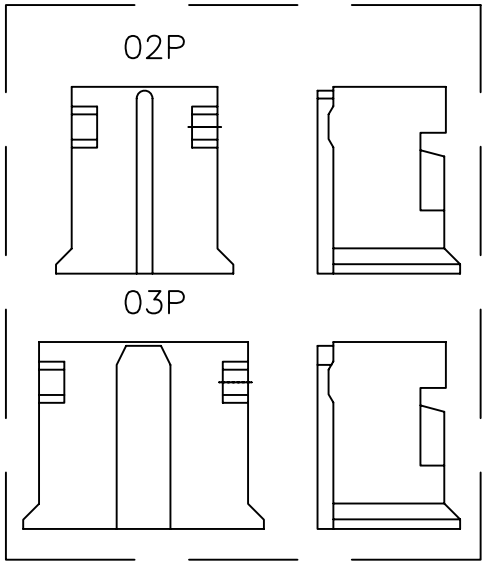

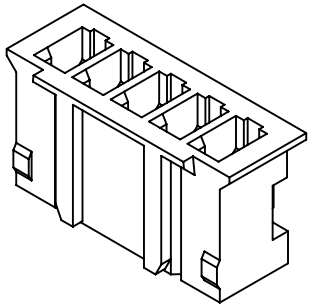

P/N LEGEND

2WBA2100 H-XP XXX
① ② ③ ④

① Series No.
② Connector type: H=Housing
③ No. of circuits
④ Option code:
Blank=Color:Yellow(153C~154C)
-0R=Color:Orange(7522C)
-0R1=Color:Orange(7524C)

SPECIFICATIONS
SPECIFICATIONS
Current Rating: 3A AC,DC
Voltage Rating: 300V AC,DC
Temperature Range: -25°C ~ +85°C
Contact Resistance: 20mΩ Max
Insulation Resistance: 100MΩ Min
Withstanding Voltage: 1000V AC/minute
Material: Nylon 66,UL94V-0

Circuit No.	Dimensions		
	A	B	C
02P	2.00	5.60	4.60
03P	4.00	7.60	6.60
04P	6.00	9.60	8.60
05P	8.00	11.60	10.60
06P	10.00	13.60	12.60
07P	12.00	15.60	14.60
08P	14.00	17.60	16.60
09P	16.00	19.60	18.60
10P	18.00	21.60	20.60
11P	20.00	23.60	22.60
12P	22.00	25.60	24.60
13P	24.00	27.60	26.60
14P	26.00	29.60	28.60
15P	28.00	31.60	30.60

REV.	DESCRIPTION	DATE	NAME
B3	EN1310080352	2013.10.08	郭木思
B2	EN1204200110	2012.04.20	陳錦展

GENERAL TOLERANCE
X.X±0.25
X.XX±0.15
X.XXX±0.05
ANGLE±

Singatron Enterprise Co., Ltd.

TITLE	2.00mm PITCH HOUSING		
DWN	董正一	PART NO.	2WBA2100H-XP
CHKD	2001.02.01	SCALE 1:1	UNIT: mm
APVD	董正一	SIZE: A3	SHEET:1 OF 1 REV: B3

CUSTOMER COPY

文件編號 RD-06-043-A