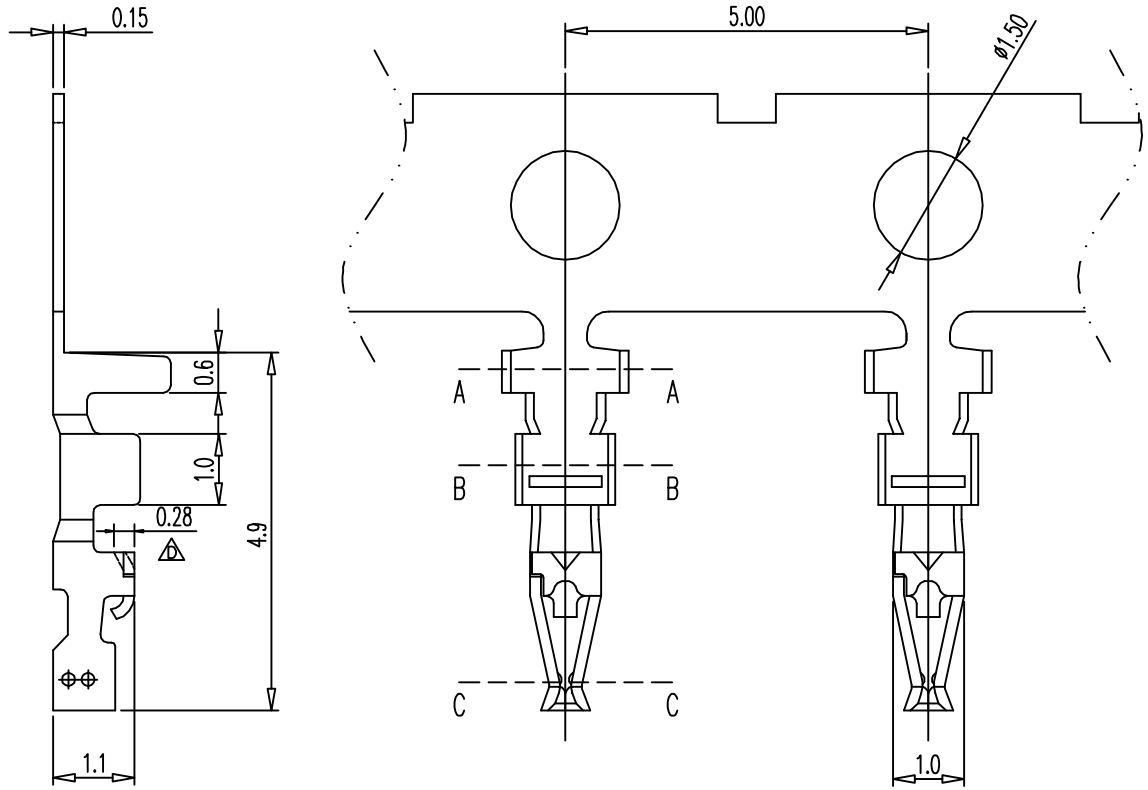

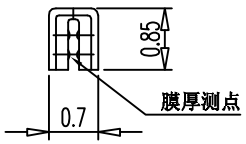

C-C SEC

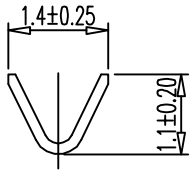

B-B SEC

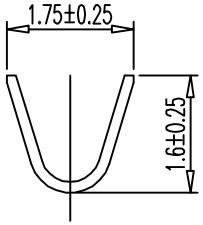

A-A SEC

TERMINAL

. Part No. : 2WT1225-TXX

(Stamping after plated) Blank: Tin Plated
Sn>50μ" Ni>10μ"

(Stamping before plated) 2: Tin Plated
Sn>100μ" Ni>30μ"

G0: Gold Plated
Au>0.8μ" Ni>30μ"

. Applicable Wires : AWG# 28~32
. Material : Copper Alloy
. Finish : Tin Plated/Gold Plated
. Thickness : 0.15mm
. Q'ty : 15,000 Pcs/Reel

TOLERANCE		REV	ECN.NO.	REVISIONS	REV.DRAWN	DATE
X.± 0.30	X°± 5.0°	C		增加电☒☒格	YU	07-08/17
.X± 0.15	.X°± 2.0°	D	08017	增加三角凹形	Yuqilong	08-01/31
.XX± 0.07	.XX°± 1.0°	E		增加膜厚☒点及电☒☒格	hejihuai	09-04/27
.XXX± 0.03	.XXX°± 0.5°	F		修正☒面与实物相符	sunquan	11-07/25

Singatron Enterprise Co., Ltd.

TITLE	1.25mm Crimp Style Connectors Terminal			
DWN	劉 娜	PART NO.	2WT1225-TXX	
CHKD	周家慶	SCALE 1:1	UNIT: mm	
APVD	張育瑞	SIZE: A3	SHEET:1 OF 1	REV: F

CUSTOMER COPY

文件編號 RD-06-043-A