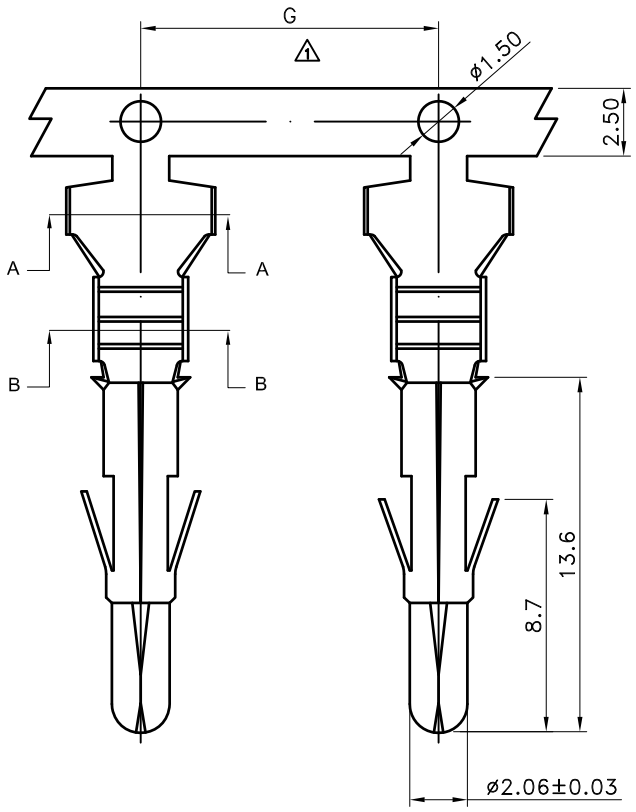

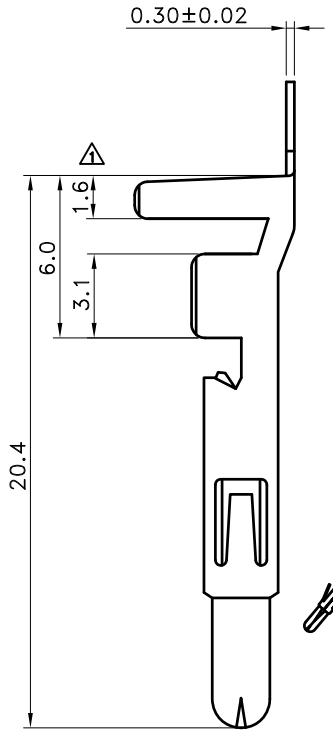

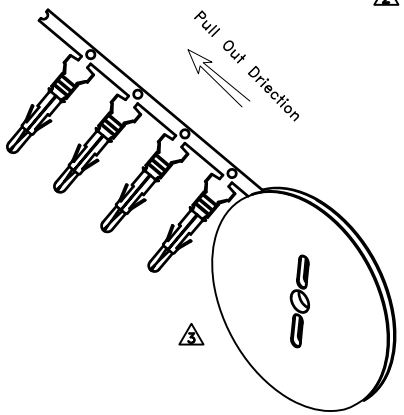

■ SPECIFICATIONS

- Voltage Rating 600 :V AC/DC
- Current Rating : 2~5 Circuit 12A AC/DC
  6~15 Circuit 9A AC/DC
- Withstanding Voltage : 2900V AC/minute.
- Insulation Resistance: 1000MΩ min
- Temperature Range : - 25°C to + 85°C
- Contact Resistance : 20mΩ max

■ MALE TERMINAL(SOLID)

- Part No. : 2WT6350H-TX
  ①Product Code ①
  High Crimp Type:
  M:Middle
  L:Low
  H:High
- Applicable Wires :
  1.TM : AWG # 16 ~ 20
  2.TL : AWG # 18 ~ 22
  3.TH: AWG # 12 ~ 14
  (Only available to use in Single-Row)
- Material : Brass
- Finish : Tin Plated
- Thickness : 0.3mm
- Q' ty : H : 5,000 pcs./Reel
  M : 5,000 pcs./Reel
  L : 5,000 pcs./Reel

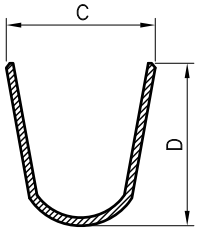

Section A-A

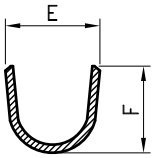

Section B-B

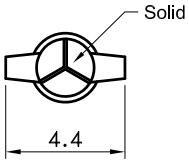

Part No	Dimension(mm)				
	C	D	E	F	G
2WT6350H-TH	6.7	5.8	3.3	4.1	15.7
2WT6350H-TM	4.5	4.5	2.9	3.5	10.9
2WT6350H-TL	3.4	3.4	2.4	2.4	

TOLERANCE		LTR	REVISION RECORD	NAME	DATE	LTR	REVISION RECORD	NAME	DATE
.0	±0.30	1	修改物性表	林謙豪	12/03/20	8			
.00	±0.20	2	修改物性表，包裝數量	張逸維	13/03/28	9			
.000	±0.10	3	增加捲繞方向圖	吳弘文	14/10/24	10			
ANGLE		4							
0°	±1°	5							
.0°	±	6							
SHEET	1/1	7							

CUSTOMER

Conforms to The RoHS Instruction

Singatron Enterprise Co., Ltd.

TITLE	ø2.13mm Power Connector Male Terminal(Solid)			
DWN	吳弘文	PART NO. 2WT6350H-TX		
CHKD	周慈雲	SCALE 1:1	UNIT: mm	
APVD	張育瑞	SIZE: A3	SHEET:1 OF 1	REV: a3

CUSTOMER COPY

文件編號 RD-06-043-A