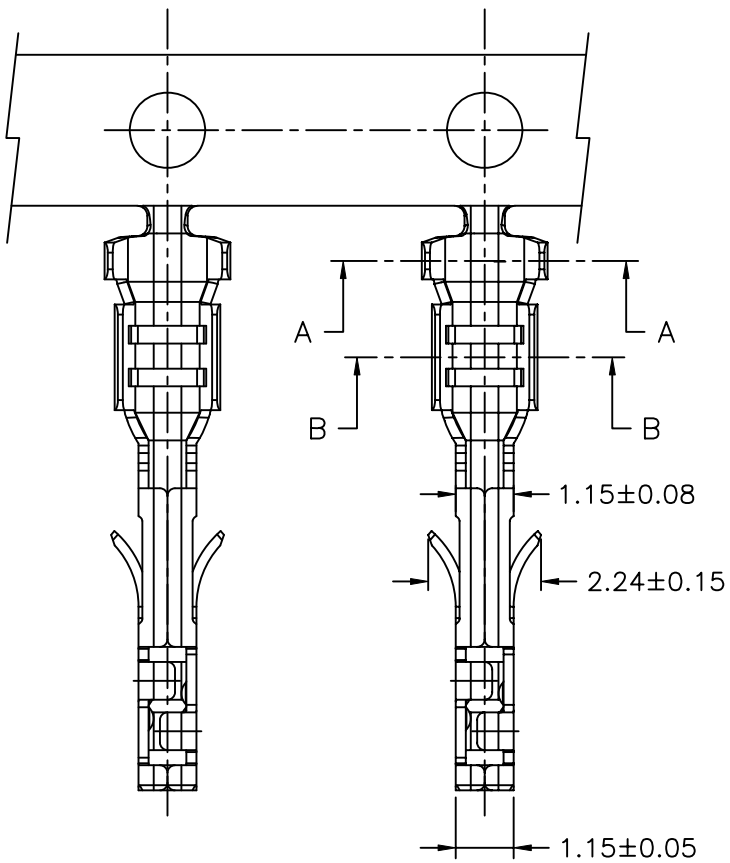

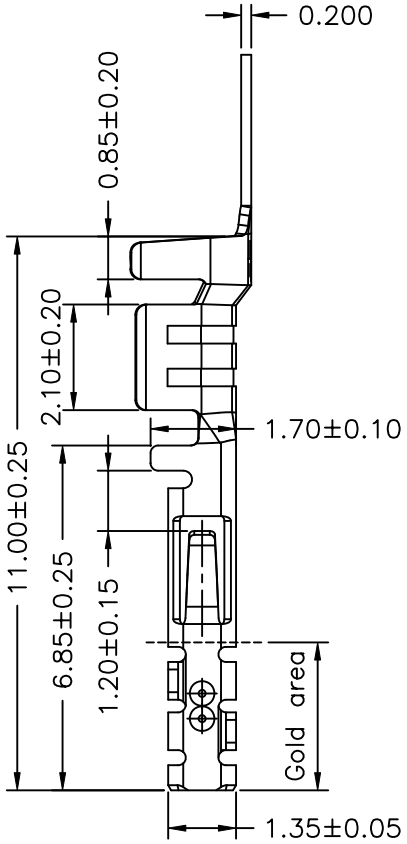

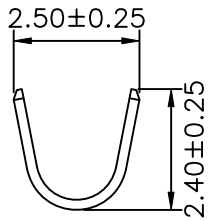

SEC:A–A

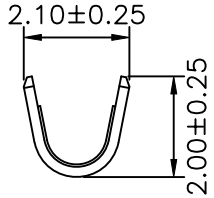

SEC:B–B

Ordering Information & Specifications

PART NO.	Wire Range	Insulation O.D.	Material	Finish	Qty/reel
2WTC3030F-TPE-TA	AWG#20-#24	1.85mm(max)	Phosphor Bronze	Tin-plated (Salt Spray 48 hours)	15,000pcs
2WTC3030F-TPE-A	AWG#20-#24	1.85mm(max)	Phosphor Bronze	Tin-plated	15,000pcs
2WTC3030F-HPE-A	AWG#20-#24	1.85mm(max)	Phosphor Bronze	Gold-flash	15,000pcs
2WTC3030F-HPE-A1	AWG#20-#24	1.85mm(max)	Phosphor Bronze	Gold-plated 15u"	15,000pcs

Note:E-Stamping before Tin-plated or Gold-plated
Note:C3030F-TPE-TA Salt Spray 48 hours

REV.	DESCRIPTION	DATE	NAME
A2	EN1704210003	2017.04.20	賴永強
A1	EN1504240002	2015.04.27	郭木思
A0	NEW RELEASE	2007.03.08	李勤

GENERAL TOLERANCE
X.X±0.25
X.XX±0.15
X.XXX±0.05
ANGLE±

Singatron Enterprise Co., Ltd.

TITLE	3.00mm PITCH CRIMP TERMINAL-FEMALE, MICRO-FIT		
DWN	李勤	PART NO. 2WTC3030F-XX-A	
CHKD	2007.03.08	SCALE 1:1	UNIT: mm
APVD	董正一	SIZE: A3	SHEET:1 OF 1 REV: A2

CUSTOMER COPY

文件編號 RD-06-043-A